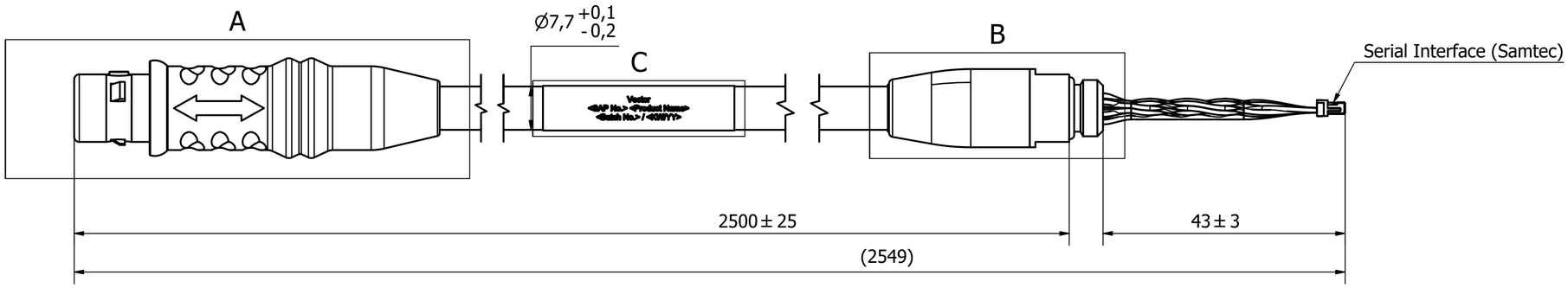

Cable/Connector configuration	
Cable	Samtec
Red	1
Black (of red)	2
White (of yellow)	3
Yellow	4
Orange	5
White (of orange)	6
White (of red)	7
Red	8
Blue	9
White (of blue)	10
White (of brown)	11
Brown	12
White (of green)	13
Green	14
Shield	15

A (2 : 1)

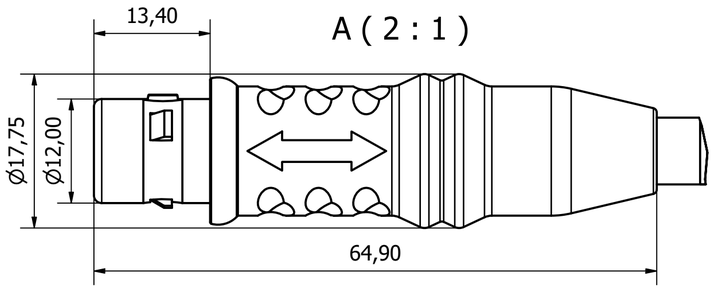

C (3 : 1)

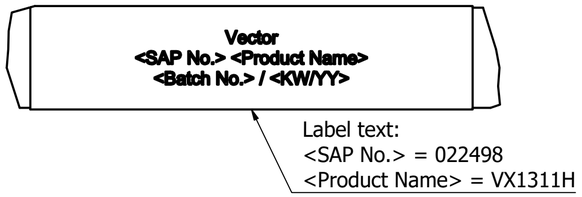

B (2 : 1)

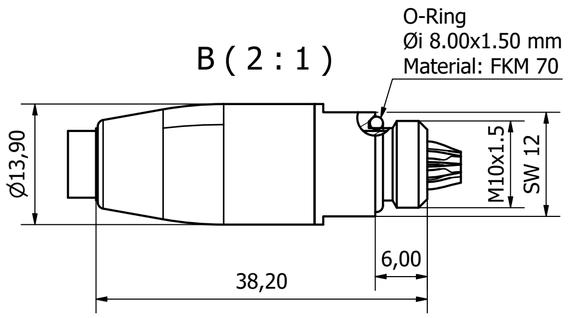

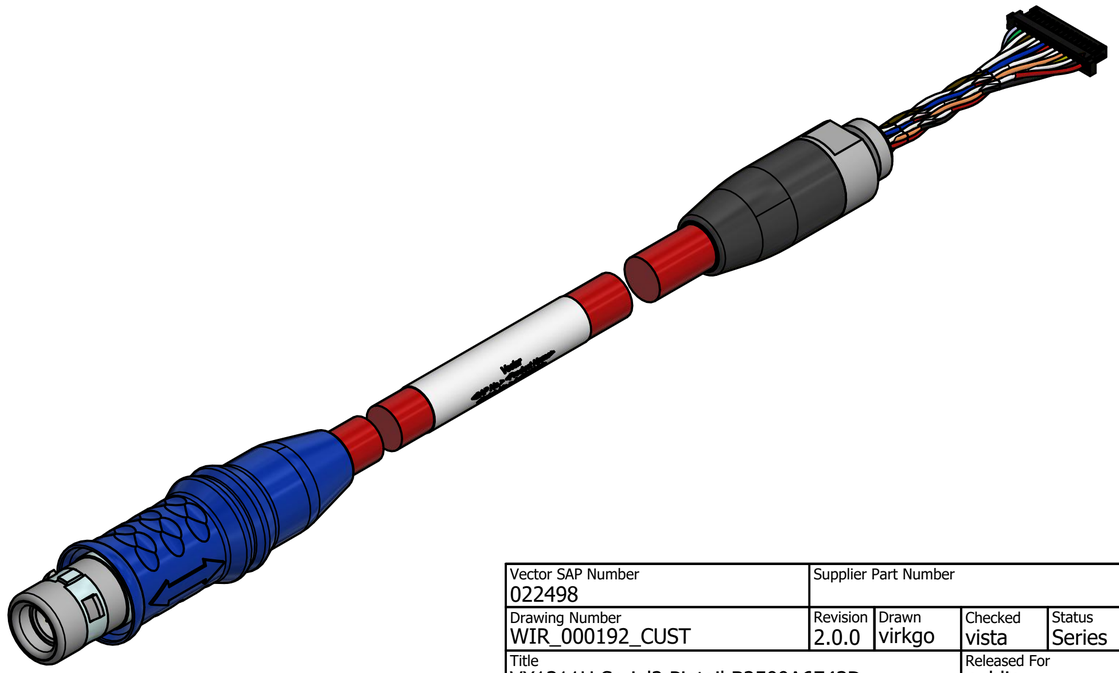

General Information:
- The picture shows the schematic structure and may not perfectly reflect the reality.
- Temperature range: -40°C to +125°C
- IP Protection class: IP67 while connected
- Bending radius of the cable: 70mm minimum, but can be reduced to 20mm if permanently installed in a fixed position
- Bending radius of internal wires: 7mm if paired, 3mm for separated wires

Vector SAP Number 022498	Supplier Part Number				
Drawing Number WIR_000192_CUST	Revision 2.0.0	Drawn virkgo	Checked vista	Status Series	Released 2023-04-26
Title VX1311H Serial2 Pigtail B2500A6E43D			Released For public		Unit metric
VECTOR	Surface Properties				RoHS Compliance 2011/65/EU
	Base Material				
Temp v3.2	Document Type customer drawing	Size A2	General Tolerances		Page 1 /1

© Vector Informatik GmbH. All rights reserved.
This document and its contents are copyright protected and proprietary to Vector Informatik GmbH. The reproduction, distribution and utilization of this document and/or its contents as well as the communication of its contents to others without express authorization is prohibited.