VECTOR

VT System

User Manual

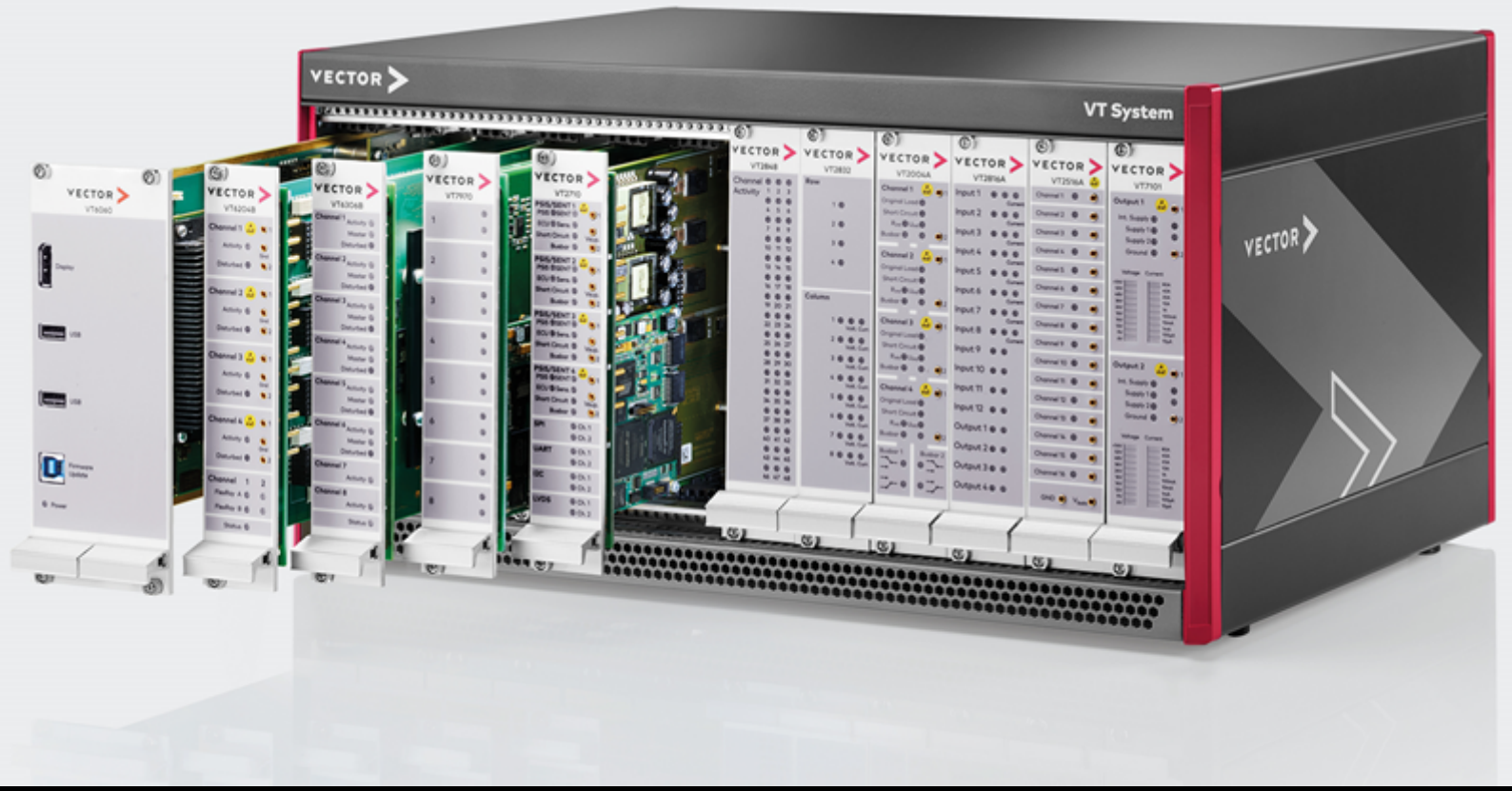

Version 3.6.1 | English

vector.com

Imprint

Vector Informatik GmbH
Ingersheimer Straße 24
D-70499 Stuttgart

Vector reserves the right to modify any information and/or data in this user documentation without notice. Vector disclaims all liabilities for the completeness or correctness of the contents and for damages which may result from the use of this documentation. This documentation nor any of its parts may be reproduced in any form or by any means without the prior written consent of Vector. To the maximum extent permitted under law, all technical data, texts, graphics, images and their design are protected by copyright law, various international treaties and other applicable law. Any unauthorized use may violate copyright and other applicable laws or regulations.
© Copyright 2026 Vector Informatik GmbH. Printed in Germany.
All rights reserved.

Contents

1 Introduction 19
1.1 VT System Setup at a Glance 20
1.1.1 General 20
1.1.2 Usage 20
1.1.3 Structure and Backplane 20
1.2 About This User Manual 21
1.2.1 Conventions 21
1.2.2 Certification 23
1.2.3 Warranty 23
1.2.4 Support 23
1.2.5 Trademarks 23
2 General Information 24
2.1 Installation 25
2.1.1 Backplane 25
2.1.2 Modules 25
2.1.3 System Setup 25
2.1.4 Cascading Several VT System Racks 28
2.2 Normal Usage 28
2.3 Protection 28
2.3.1 Safety Functions in CANoe 29
2.3.2 Fuses 29
2.3.3 Inductive Loads 29
2.3.4 Capacitive Loads 29
2.3.5 Parallel Circuit of Channels 30
2.3.6 ESD Protection Devices 31
2.3.7 Noise and Cross Talk 31
2.4 Supply Voltage and Ground 31
2.4.1 Rules 32
2.5 Bus Bars 33
2.6 Time Synchronization 33
2.6.1 Driver-Based Time Synchronization 33
2.6.2 Legacy Mode 35
2.7 Firmware Update 35
2.8 Calibration 36
2.9 Checklists 37

2.9.1 Before Initial Operation ... 37
2.9.2 Before Connecting an ECU for Testing ... 37

3 VT1004/VT1104 – Load and Measurement Module ... 38

3.1 Purpose ... 40
3.1.1 VT1004A ... 40
3.1.2 VT1104 ... 40
3.1.3 VT1004A FPGA ... 40
3.2 Installation ... 40
3.3 Usage ... 41
3.3.1 Basic Connection Scheme ... 41
3.3.2 Signal Path Switching ... 42
3.3.3 Using the Bus Bars ... 43
3.3.4 Measurement ... 44
3.3.5 Electronic Load ... 44
3.3.6 Displays ... 46
3.3.7 Fuses ... 47
3.4 Connectors ... 47
3.4.1 ECU Connector ... 47
3.4.2 Original Load Connector ... 48
3.4.3 Bus Bar Connector ... 49
3.4.4 Front Panel Measurement Connector ... 50
3.5 Technical Data VT1004A ... 51
3.5.1 General ... 51
3.5.2 Input Signals and Switches ... 51
3.5.3 Electronic Load ... 52
3.5.4 Voltage Measurement ... 52
3.5.5 Digital Input ... 54
3.5.6 PWM Measurement ... 54
3.6 Technical Data VT1104 ... 56
3.6.1 General ... 56
3.6.2 Input Signals and Switches ... 56
3.6.3 Electronic Load ... 57
3.6.4 Voltage Measurement ... 57
3.6.5 Digital Input ... 59
3.6.6 PWM Measurement ... 59

4 VT2004 – Stimulation Module ... 61

4.1 Purpose ... 62

4.1.1 VT2004A ... 62
4.1.2 VT2004A FPGA ... 62
4.2 Installation ... 62
4.3 Usage ... 62
4.3.1 Basic Connection Scheme ... 62
4.3.2 Signal Path Switching ... 63
4.3.3 Using the Bus Bars ... 64
4.3.4 Decade Resistor ... 64
4.3.5 Voltage Stimulation ... 65
4.3.6 Potentiometer Stimulation ... 65
4.3.7 Displays ... 65
4.4 Connectors ... 66
4.4.1 Potentiometer Reference Connector ... 66
4.4.2 ECU Connector ... 67
4.4.3 Original Sensor Connector ... 69
4.4.4 Bus Bar Connector ... 69
4.4.5 Front Panel Measurement Connector ... 70
4.5 Technical Data VT2004A ... 70
4.5.1 General ... 70
4.5.2 Input Signals and Switches ... 71
4.5.3 Voltage Stimulation ... 72
4.5.4 Decade Resistor ... 72
4.5.5 PWM Generation ... 73

5 VT2516A – Digital Module ... 74
5.1 Purpose ... 75
5.1.1 VT2516A ... 75
5.1.2 VT2516A FPGA ... 75
5.2 Installation ... 75
5.3 Usage ... 75
5.3.1 Basic Connection Scheme ... 75
5.3.2 Signal Path Switching ... 76
5.3.3 Using the Bus Bars ... 77
5.3.4 Measuring the Digital Input Signal ... 77
5.3.5 Voltage Measurement ... 77
5.3.6 Outputting a Digital Signal ... 78
5.3.7 Load or Pull-up/down Resistor ... 78
5.3.8 Displays ... 78
5.4 Connectors ... 78

5.4.1 ECU Connector ... 79
5.4.2 Original Load/Sensor Connector ... 81
5.4.3 Load Resistor Connectors ... 83
5.4.4 Bus Bar Connector ... 83
5.5 Technical Data VT2516A ... 84
5.5.1 General ... 84
5.5.2 Input Signals and Switches ... 84
5.5.3 Digital Input ... 85
5.5.4 PWM Measurement ... 85
5.5.5 Voltage Measurement ... 85
5.5.6 Digital Output ... 86
5.5.7 PWM Generation ... 86

6 VT2710 – Serial Interface Module ... 88

6.1 Purpose ... 90
6.2 Installation ... 90
6.3 Usage ... 91
6.3.1 Basic Connection Scheme ... 91
6.3.2 Signal Path and Switching Options Digital Interfaces ... 93
6.3.3 Using the Bus Bars ... 98
6.3.4 Using the Digital Interfaces ... 98
6.3.5 Digital I/O ... 99
6.3.6 SPI ... 99
6.3.7 UART/RS232 ... 99
6.3.8 RS485/RS422 ... 99
6.3.9 I2C ... 100
6.3.10 LVDS ... 100
6.3.11 Displays ... 100
6.4 PSI5SENTpiggyA ... 102
6.4.1 Signal Path Switching ... 102
6.4.2 PSI5 ... 107
6.4.3 SENT ... 107
6.5 Connectors ... 108
6.5.1 Digital Interface Connector 1 ... 108
6.5.2 Digital Interface Connector 2 ... 110
6.5.3 PSI5SENTpiggyA Connector 1 ... 111
6.5.4 PSI5SENTpiggyA Connector 2 ... 112
6.5.5 Bus Bar Connector 1 ... 113
6.5.6 Bus Bar Connector 2 ... 113

6.5.7 LVDS Connector 1 ... 114
6.5.8 LVDS Connector 2 ... 114
6.5.9 Front Panel Measurement Connector ... 116
6.6 Technical Data VT2710 ... 116
6.6.1 General ... 116
6.6.2 PSI5 Interface ... 117
6.6.3 SENT Interface ... 117
6.6.4 Digital Voltage ... 118
6.6.5 SPI Interface ... 119
6.6.6 UART Interface ... 120
6.6.7 RS232 Interface ... 120
6.6.8 RS485/RS422 Interface ... 122
6.6.9 I2C Interface ... 122
6.6.10 LVDS Interface ... 122

7 VT2808 – Current Measurement Module ... 124

7.1 Purpose ... 125
7.2 Installation ... 125
7.3 Usage ... 125
7.3.1 Basic Connection Scheme ... 125
7.3.2 Current Measurement ... 127
7.3.3 Voltage Measurement ... 127
7.3.4 External Shunt Measurement ... 127
7.3.5 Displays ... 128
7.4 Connectors ... 129
7.4.1 Measurement Connector 1 (Channels 1 to 4) ... 129
7.4.2 Measurement Connector 2 (Channels 5 to 8) ... 130
7.4.3 Reference Connector 1 ... 130
7.4.4 Reference Connector 2 ... 131
7.5 Technical Data VT2808 ... 132
7.5.1 General ... 132
7.5.2 Current Measurement ... 132
7.5.3 External Shunt Measurement ... 132
7.5.4 Voltage Measurement ... 134

8 VT2812 – General-Purpose Analog Output Module ... 135

8.1 Purpose ... 136
8.2 Installation ... 136
8.3 Usage ... 136

8.3.1 Basic Connection Scheme ... 136
8.3.2 Voltage Stimulation ... 136
8.3.3 Displays ... 137
8.4 Connectors ... 138
8.4.1 Voltage Simulation Connector 1 (Channels 1 to 4) ... 138
8.4.2 Voltage Stimulation Connector 2 (Channels 5 to 8) ... 139
8.4.3 Voltage Stimulation Connector 3 (Channels 9 to 12) ... 140
8.4.4 Output Ground Connector ... 140
8.5 Technical Data VT2812 ... 141
8.5.1 General ... 141
8.5.2 Voltage Stimulation ... 141

9 VT2816A – General-Purpose Analog I/O Module ... 143

9.1 Purpose ... 144
9.1.1 VT2816A ... 144
9.1.2 VT2816A FPGA ... 144
9.2 Installation ... 144
9.3 Usage ... 144
9.3.1 Basic Connection Scheme ... 144
9.3.2 Measurement ... 146
9.3.3 Voltage Stimulation ... 146
9.3.4 Displays ... 147
9.4 Connectors ... 148
9.4.1 Voltage Measurement Connector 1 ... 148
9.4.2 Current Measurement Connector ... 149
9.4.3 Voltage Measurement Connector 2 ... 150
9.4.4 Voltage Stimulation Connector ... 152
9.4.5 Output Ground Connector ... 153
9.5 Technical Data VT2816A ... 154
9.5.1 General ... 154
9.5.2 Voltage Measurement ... 154
9.5.3 Current Measurement ... 156
9.5.4 Voltage Stimulation ... 156

10 VT2820 – General-Purpose Relay Module ... 157

10.1 Purpose ... 158
10.2 Installation ... 158
10.3 Usage ... 158
10.4 Connectors ... 159

10.4.1 Relay Connector 1 159
10.4.2 Relay Connector 2 160
10.4.3 Relay Connector 3 161
10.4.4 Relay Connector 4 163
10.4.5 Bus Bar Connector 163
10.5 Technical Data VT2820 164
10.5.1 General 164
10.5.2 Relays 164
10.5.3 Fuses 166

11 VT2828 – Signal Switching Matrix Module 167
11.1 Purpose 168
11.2 Installation 168
11.3 Usage 168
11.3.1 Basic Connections Scheme 168
11.3.2 Signal Path Switching 168
11.3.3 Exemplary Communication Signals 169
11.3.4 Displays 170
11.4 Connectors 171
11.4.1 Column Connector 1 171
11.4.2 Column Connector 2 172
11.4.3 Row Connector 1 173
11.4.4 Row Connector 2 175
11.4.5 GND Connector 1 and 2 176
11.5 Technical Data VT2828 176
11.5.1 General 176
11.5.2 Input Signals 177
11.5.3 Relays 177

12 VT2832 – Switch Matrix Module 178
12.1 Purpose 179
12.2 Installation 179
12.3 Usage 179
12.3.1 Basic Connection Scheme 179
12.3.2 Signal Path Switching 179
12.3.3 Measurement 180
12.3.4 Switching 181
12.3.5 Maximum Current 181
12.3.6 Displays 181

12.4 Connectors ... **182**
12.4.1 Column Connector ... 182
12.4.2 Row/Switch Connector ... 183
12.5 Technical Data VT2832 ... **185**
12.5.1 General ... 185
12.5.2 Input Signals and Switches ... 185
12.5.3 Voltage Measurement ... 187
12.5.4 Current Measurement ... 187

13 VT2848 – General-Purpose Digital I/O Module ... 188
13.1 Purpose ... **189**
13.1.1 VT2848 ... 189
13.1.2 VT2848 FPGA ... 189
13.2 Installation ... **189**
13.3 Usage ... **189**
13.3.1 Basic Connection Scheme ... 189
13.3.2 Measuring the Digital Input Signal ... 192
13.3.3 Output of a Digital Signal ... 192
13.3.4 Displays ... 193
13.4 Connectors ... **194**
13.4.1 I/O Connector 1 ... 194
13.4.2 I/O Connector 2 ... 196
13.4.3 I/O Connector 3 ... 198
13.4.4 I/O Connector 4 ... 199
13.4.5 Battery Voltage Connector ... 199
13.4.6 External Voltage Connector ... 200
13.5 Technical Data VT2848 ... **200**
13.5.1 General ... 200
13.5.2 Digital Input ... 201
13.5.3 PWM Measurement ... 201
13.5.4 Digital Output ... 202
13.5.5 PWM Generation ... 203

14 VT5201 – Smart Charging Module ... 206
14.1 Purpose ... **207**
14.2 Installation ... **207**
14.3 Usage ... **207**
14.3.1 Basic Connection Scheme ... 207
14.3.2 Signal Path Switching ... 209

14.3.3 Error Simulation ... 211
14.3.4 Displays ... 211
14.3.5 High Level Communication Piggies ... 213
14.3.5.1 QCA7000 ... 213
14.3.5.2 QCA7006AQ ... 213
14.3.5.3 CG5317 ... 214
14.3.5.4 MSE1021 ... 214
14.4 Connectors ... 215
14.4.1 Communication Connector ... 215
14.4.2 Measurement Connector ... 217
14.4.3 Bus Bar Connector ... 219
14.5 Technical Data VT5201 ... 220
14.5.1 General ... 220
14.5.2 Control Pilot PWM Stimulation ... 220
14.5.3 Control Pilot PWM Measurement ... 221
14.5.4 Proximity Contact Measurement ... 221
14.5.5 Resistance Values ... 221
14.5.6 Error Simulation ... 222
14.5.7 Line Communication ... 222

15 VT5838 – Multi-IO / E-Machine Module ... 223
15.1 Purpose ... 224
15.2 Installation ... 224
15.3 Usage ... 224
15.3.1 Basic Connection Scheme ... 224
15.3.2 Voltage Measurement ... 226
15.3.3 Voltage Stimulation ... 226
15.3.4 Measuring Digital Input Signals ... 226
15.3.5 Output of Digital Signals ... 226
15.3.6 Displays ... 226
15.4 Connectors ... 227
15.4.1 Voltage Measurement Connector 1 ... 227
15.4.2 Voltage Measurement Connector 2 ... 229
15.4.3 Voltage Stimulation Connector 1 ... 230
15.4.4 Voltage Stimulation Connector 2 ... 231
15.4.5 Digital I/O Connector 1 ... 232
15.4.6 Digital I/O Connector 2 ... 233
15.5 Technical Data VT5838 ... 234
15.5.1 General ... 234

15.5.2 Voltage Measurement 234
15.5.3 Voltage Stimulation 236
15.5.4 Digital Input 236
15.5.5 Digital Output 236
15.5.6 LVDS 238
15.5.7 RS422 238

16 VT6000 – Real-Time Module 239

16.1 Purpose 240
16.2 Installation 240
16.2.1 Connections 240
16.3 Usage 241
16.3.1 General 241
16.3.2 Update 242
16.4 Connectors 242
16.4.1 PCI Express Ports 242
16.4.2 Ethernet Port 243
16.4.3 USB Ports 243
16.5 Technical Data VT6000 243
16.5.1 General 243
16.5.2 VT6011 243
16.5.3 VT6051A 244

17 VT6020/VT6060/VT6061 – Real-Time Module 245

17.1 Purpose 246
17.2 Installation 246
17.2.1 Connections 246
17.2.2 VH9100 247
17.3 Usage 247
17.3.1 General 247
17.3.2 Update 248
17.4 Connectors 249
17.4.1 Base Board 249
17.4.2 VT6020 249
17.4.3 VT6060/VT6061 249
17.4.4 PCI Express Ports 250
17.4.5 Ethernet Port 250
17.4.6 USB3 Ports 250
17.4.7 Display Port 250

17.4.8 USB for Keyman ... 250
17.5 Technical Data VT6020/VT6060/VT6061 ... 250
17.5.1 General ... 250
17.5.2 VT6020 ... 250
17.5.3 VT6060 ... 251
17.5.4 VT6061 ... 251

18 VT6104B/VT6204B – Network Module ... 253

18.1 Purpose ... 254
18.1.1 VT6104B ... 254
18.1.2 VT6204B ... 254
18.2 Installation ... 254
18.3 Usage ... 254
18.3.1 Basic Connection Scheme ... 254
18.3.2 Signal Path Switching ... 255
18.3.3 Optional Disturbance Piggyback ... 256
18.3.4 Displays ... 256
18.4 Network Interface Usage ... 257
18.4.1 Bus Configuration ... 257
18.4.2 Driver Installation ... 258
18.4.3 Synchronization ... 258
18.5 Connectors ... 260
18.5.1 CAN/LIN/FR Connector (Channel 1 & 2) ... 260
18.5.2 CAN/LIN Connector (Channel 3 & 4) ... 262
18.5.3 Bus Bar Connector ... 263
18.5.4 Sync Connector ... 264
18.6 RLCpiggy ... 264
18.6.1 Installation ... 265
18.6.2 Control via CANoe ... 265
18.7 Technical Data VT6104B/VT6204B ... 266
18.7.1 General ... 266
18.7.2 Signals and Switching ... 266
18.7.3 CAN/LIN/FR Interface ... 267

19 VT6306B – Ethernet Network Module ... 268

19.1 Purpose ... 269
19.2 Installation ... 269
19.3 Usage ... 269
19.3.1 Basic Connection Scheme ... 269

19.3.2 Signal Path Switching ... 270
19.3.3 Signal Attenuation ... 272
19.3.4 Using the Bus Bars ... 272
19.3.5 Displays ... 273
19.4 Network Interface Usage ... 273
19.4.1 Synchronization ... 275
19.5 Connectors ... 275
19.5.1 Bus Bar Connector ... 276
19.5.2 Sync Connector ... 276
19.5.3 Ethernet Connector ... 276
19.6 Connectors 100BASE-T1piggy 1101 ... 277
19.6.1 Automotive Ethernet Connector 1 (Channel 1 & 2) ... 277
19.6.2 Automotive Ethernet Connector 2 (Channel 3 & 4) ... 278
19.6.3 Automotive Ethernet Connector 3 (Channel 5 & 6) ... 278
19.7 Connectors 1000BASE-T1piggy 88Q2112 ... 280
19.7.1 Automotive Ethernet Connector 1 (Channel 1 & 2) ... 280
19.7.2 Automotive Ethernet Connector 2 (Channel 3 & 4) ... 281
19.7.3 Automotive Ethernet Connector 3 (Channel 5 & 6) ... 281
19.8 Connectors VTpiggy 6AE1G 88Q2221M ... 283
19.8.1 Automotive Ethernet Connector 1 (Channel 1 & 2) ... 283
19.8.2 Automotive Ethernet Connector 2 (Channel 3 & 4) ... 284
19.8.3 Automotive Ethernet Connector 3 (Channel 5 & 6) ... 284
19.9 Technical Data VT6306B ... 285
19.9.1 General ... 285
19.9.2 Signals and Switching ... 286
19.9.3 Ethernet Interfaces ... 287

20 VT7001A/VT7101 – Power Module ... 289

20.1 Purpose ... 291
20.1.1 VT7001A ... 291
20.1.2 VT7101 ... 291
20.2 Installation ... 291
20.3 Usage ... 291
20.3.1 Basic Connection Scheme ... 291
20.3.2 Signal Path Switching ... 293
20.3.3 External Power Supplies ... 293
20.3.4 Internal Power Supply ... 294
20.3.5 Outputs ... 294
20.3.6 Measuring Current and Voltage ... 294

20.3.7 Hardware Synchronization ... 295
20.3.8 Ground Connection ... 296
20.3.9 Displays ... 296
20.4 Connectors ... 298
20.4.1 Auxiliary and Bus Bar Output Connector ... 300
20.4.2 Control Voltage Connector ... 300
20.4.3 ECU and External Power Supply Connector ... 301
20.4.4 Sync Connector ... 302
20.4.5 Serial Interface Connectors ... 302
20.5 Technical Data VT7001A ... 303
20.5.1 General ... 303
20.5.2 Input Signals and Switches ... 304
20.5.3 Internal Power Supply ... 304
20.5.4 Control Voltages for External Power Supplies ... 305
20.5.5 Current Measurement ... 306
20.5.6 Voltage Measurement ... 306
20.6 Technical Data VT7101 ... 307
20.6.1 General ... 307
20.6.2 Input Signals and Switches ... 307
20.6.3 Internal Power Supply ... 307
20.6.4 Control Voltages for External Power Supplies ... 308
20.6.5 Current Measurement ... 308
20.6.6 Voltage Measurement ... 310

21 VT78xx – Application Boards ... 311

21.1 Installation ... 312
21.2 Application Board Configuration ... 312
21.3 Display ... 312
21.4 System Variables ... 312
21.5 VT7820 ... 313
21.5.1 Purpose ... 313
21.5.2 Usage ... 314
21.5.2.1 Basic Connection Scheme ... 314
21.5.2.2 Signal Path Switching ... 315
21.5.2.3 Automatic Creation of an Output Signal ... 315
21.5.2.4 Manual Creation of a Signal ... 316
21.5.3 Error Simulation ... 316
21.5.4 Constant Output ... 316
21.5.5 Connectors ... 317

21.5.5.1 Output Connector ... 317
21.5.6 Technical Data VT7820 ... 318
21.5.6.1 General ... 318
21.5.6.2 Current Stimulation ... 318
21.5.6.3 Voltage Stimulation ... 319
21.6 VT7852 ... 320
21.6.1 Purpose ... 320
21.6.2 Usage ... 320
21.6.2.1 Schematics ... 320
21.6.3 Connectors ... 320
21.6.3.1 Signal Connector ... 320
21.6.3.2 Bus Bar Connector ... 321
21.6.4 Technical Data VT7852 ... 322
21.6.4.1 General ... 322
21.6.4.2 Input Signals ... 322
21.6.4.3 Relays ... 322
21.7 VT7880 - GB/T CHAdeMO ... 324
21.7.1 Purpose ... 324
21.7.2 Usage ... 324
21.7.2.1 Schematics ... 324
21.7.2.2 Signal Path Switching ... 327
21.7.3 Connectors ... 330
21.7.3.1 Output Connector ... 331
21.7.4 Technical Data VT7880 ... 334
21.7.4.1 General ... 334
21.7.4.2 Resistor Values GB/T 2015 ... 334
21.7.4.3 Resistor Values GB/T 2024 ... 334
21.7.4.4 Resistor Values CHAdeMO 2.0 ... 334
21.7.4.5 Resistor Values CHAdeMO 3.0 ... 335
21.7.4.6 Voltage Generation ... 335
21.7.4.7 Voltage Measurement ... 335

22 VT7900A – Extension Module ... 337

22.1 Purpose ... 338
22.2 Installation ... 338
22.3 Usage ... 338
22.3.1 General ... 338
22.3.2 Controlling the Application Board ... 338
22.3.3 Front LEDs ... 339

22.4 Application Board ... **339**
22.4.1 Dimensions ... 339
22.4.2 Supply Power for the Application Board ... 340
22.4.3 Configuration EEPROM on the Application Board ... 340
22.4.4 Electrical Interface Characteristics ... 340
22.4.5 Using the I/O Lines of the VT7900A on the Application Board ... 340
22.4.6 Adding I/O Interfaces to the Application Board ... 340
22.5 Connectors ... **341**
22.5.1 Connectors for Signals from Application Board ... 341
22.5.2 Application Board Connectors ... 342
22.6 Technical Data VT7900A ... **348**
22.6.1 General ... 348
22.6.2 Application Board ... 348
22.6.3 Connectors for Application-specific Signals ... 348
22.6.4 Analog Inputs AIN0 ... AIN3 ... 349
22.6.5 Analog Output AOUT0 ... AOUT3 ... 349

23 VT7970/VT7971 – Smart Charging Module ... **350**

23.1 Purpose ... **351**
23.1.1 VT7970 ... 351
23.1.2 VT7971 ... 351
23.2 Installation ... **351**
23.3 Usage ... **352**
23.3.1 Basic Connection Scheme ... 352
23.3.2 Signal Path Switching ... 353
23.3.3 System Variables ... 353
23.3.4 Error Simulation ... 354
23.3.5 Displays ... 354
23.4 Connectors ... **356**
23.4.1 Communication Connector ... 356
23.4.2 Measurement Connector ... 357
23.5 Technical Data VT7970/VT7971 ... **358**
23.5.1 General ... 358
23.5.2 Control Pilot PWM Stimulation ... 359
23.5.3 16.5.3 Control Pilot PWM Measurement ... 360
23.5.4 Proximity Contact Measurement ... 361
23.5.5 Error Simulation ... 361
23.5.6 Line Communication ... 361

24 VT8006B/VT8012B – Backplane 362
24.1 Purpose **363**
24.2 Installation **363**
24.3 External Connectors **364**
24.3.1 Power Supply Connector 366
24.3.2 Trigger Connector 366
24.3.3 Auxiliary Connector 367
24.3.4 Ethernet Connectors 367
24.4 Ground Connection Relay **367**
24.5 Technical Data VT8006B/VT8012B **368**

25 VT9006/VT9012/VT9112/VT9212 - Housings 369
25.1 Installation **370**
25.2 Technical Data VT9xxx **370**
25.2.1 VT9006 370
25.2.2 VT9012 370
25.2.3 VT9112 370
25.2.4 VT9212 371

26 User Programmable FPGA 372
26.1 Purpose **373**
26.2 Installation **373**
26.3 Usage **373**
26.4 Technical Data **374**

1 Introduction

In this chapter you find the following information:

1.1 VT System Setup at a Glance **20**
1.1.1 General 20
1.1.2 Usage 20
1.1.3 Structure and Backplane 20
1.2 About This User Manual **21**
1.2.1 Conventions 21
1.2.2 Certification 23
1.2.3 Warranty 23
1.2.4 Support 23
1.2.5 Trademarks 23

1.1 VT System Setup at a Glance

1.1.1 General

- The VT System is a modular hardware system for controlling ECU I/O connections for testing purposes.
- The connections are controlled via CANoe and the tests are scripted in Vector CANoe.
- The actuator and sensor connections of the ECU to be tested are linked directly to the VT System modules.
- The original actuators and sensors can also be connected to the VT modules.
- However, they can also be simulated using the VT modules.
- The ECU's output signals are measured and pre-processed (e.g. into averages, effective values or PWM parameters), and are passed to the CANoe test programs in processed form.
- Stimulation signals for ECU's inputs (e.g. PWM signals) can be defined by the CANoe test program and are created on the VT module.
- Some VT System modules are available with an user programmable FPGA, where the measured signals can be processed individually and the stimulation signals can be created custom-designed.
- The VT modules can also generate several electrical errors, e.g. short circuits between ECU lines, line breaks or short circuits to ground/ V_{batt}.

1.1.2 Usage

The VT System is completely controlled by CANoe. Therefore all information about programming and using the VT System can be found in the CANoe online help.

1.1.3 Structure and Backplane

- The VT System consists of one or more 19" racks with a backplane into which the VT modules are inserted.
- The backplane takes up the lower quarter of the rear; the module connectors are directly accessible in the upper area.
- The ECU lines and original loads are plugged directly into these connectors.
- CANoe is connected via an Ethernet cable using a special, real time-capable industrial Ethernet protocol (EtherCAT®).
- The backplane links the EtherCAT bus and the power supply (for the VT module, not the unit to be tested) to the inserted VT modules.
- The PC running CANoe only requires an Ethernet port; no special PC hardware is needed. This also applies to CANoe RT.

1.2 About This User Manual

1.2.1 Conventions

In the two tables below you will find the notation and icon conventions used throughout the manual.

Style	Utilization
bold	Fields/blocks, user/surface interface elements, window- and dialog names of the software, special emphasis of terms **[OK]** Buttons in brackets **File|Save** Notation for menus and menu commands
`Source Code`	File and directory names, source code, class and object names, object attributes and values
Hyperlink	Hyperlinks and references
<CTRL>+<S>	Notation for key combinations

Symbol	Utilization
	**DANGER!** Immediate hazard! > Failure to observe will result in death or extremely severe injuries to persons!
	**WARNING!** Dangerous situation! > Failure to observe can result in death or extremely severe injuries to persons!
	**CAUTION!** Possibly dangerous situation! > Failure to observe can result in light or minor injuries to persons! > Failure to observe can result in damage to the product or the surroundings!
	**NOTICE!** Possibly damaging situation! > Failure to observe can result in damage to the product or the surroundings!

Symbol	Utilization
	Additional information. > Notes and tips that facilitate your work.
	More detailed information.
	Examples
	Step-by-step instructions.
	Text areas where changes of the currently described file are allowed or necessary.
	Files you must not change.
	Multimedia files e.g. video clips.
	Introduction into a specific topic.
	Text areas containing basic knowledge.
	Text areas containing expert knowledge.
	Something has changed.

1.2.2 Certification

Vector Informatik GmbH has ISO 9001 certification. The ISO standard is a globally recognized standard.

1.2.3 Warranty

We reserve the right to modify the contents of the documentation or the software without notice. Vector disclaims all liabilities for the completeness or correctness of the contents and for damages which may result from the use of this documentation.

1.2.4 Support

Use the Vector Support Website to find supportive answers for your work with Vector products from multiple resources.

If you don't find what you are looking for, you can open a support case to get individual help.

- Vector Support Website (support.vector.com)
- Vector KnowledgeBase (support.vector.com/kb)
- Support E-Mail: support@vector.com

1.2.5 Trademarks

All brand names in this documentation are either registered or non registered trademarks of their respective owners.

2 General Information

In this chapter you find the following information:

2.1 Installation **25**
2.1.1 Backplane 25
2.1.2 Modules 25
2.1.3 System Setup 25
2.1.4 Cascading Several VT System Racks 28
2.2 Normal Usage **28**
2.3 Protection **28**
2.3.1 Safety Functions in CANoe 29
2.3.2 Fuses 29
2.3.3 Inductive Loads 29
2.3.4 Capacitive Loads 29
2.3.5 Parallel Circuit of Channels 30
2.3.6 ESD Protection Devices 31
2.3.7 Noise and Cross Talk 31
2.4 Supply Voltage and Ground **31**
2.4.1 Rules 32
2.5 Bus Bars **33**
2.6 Time Synchronization **33**
2.6.1 Driver-Based Time Synchronization 33
2.6.2 Legacy Mode 35
2.7 Firmware Update **35**
2.8 Calibration **36**
2.9 Checklists **37**
2.9.1 Before Initial Operation 37
2.9.2 Before Connecting an ECU for Testing 37

2.1 Installation

2.1.1 Backplane

The backplane VT8006B is built into a 19" half width frame (9.5", 42 HP), the VT8012B into a 19" full width frame (84 HP) that has a height of 4 U. The VT modules are 7 HP wide, which means that 6 respective 12 slots are available. Please refer to chapter 24.2 Installation for a detailed assembly instruction.

2.1.2 Modules

With the power supply switched off, insert the module carefully into a 19" rack that has a VT System backplane (e.g. VT8012B). Tighten the two screws at the front. The module must not be plugged in or unplugged during operation.



NOTICE!

Insert the modules very carefully to avoid damages of the modules!

Especially, take care of the circuits on the backside of the modules.

The ECU lines, original loads, buses etc. can be connected directly to the module at the rear. The VT System power supply must be switched off when connectors are plugged in or unplugged.

Use the plugs at the front of the module for temporary measurements of ECU signals, e.g. to check the output signal of an ECU temporarily using a scope. Don't use the plugs for permanent connections.

The backplanes supplies the module with power and the signals to communicate with CANoe. It can therefore now be accessed and used with CANoe. The modules are automatically recognized via the backplane and configured in CANoe. No further preparation is needed to operate the system. The modules are listed in CANoe from left to right (seen while standing in front of the rack).

Any number of slots can be used in one rack. It is possible, for example, to use every other slot as this improves heat dissipation. For EMC reasons, any gaps at the front should always be closed with a cover plate.

The VT System is a modular system that is suited for flexible use. Therefore, the modules in a VT System rack may be changed sometimes. But the backplane connectors are not designed for frequently changing modules.

2.1.3 System Setup

Connecting the Power Supply

The VT System itself must be powered with a 12 V external adaptor of sufficient capacity. To comply to the EMC rules the VT System must not be connected to a 12V power line which exceeds a length of 3m. As a rule of thumb, the backplane requires 3 watts and each module another 9 to 18 watts. You find the concrete values in the technical data of the respective modules in this manual.



NOTICE!

Connect the VT System power supply to the pins +**12 V** and **DGND** of the power supply connector on the backplane. Do not use the pin AGND instead of DGND even if DGND and AGND are joined at the plug.

Reason: The system must not be connected to the power supply ground via AGND only, e.g. if the DGND connection is broken. This will damage some VT modules.

Connecting the ECU Ground

The ECU's ground must be connected to AGND as a reference ground and AGND must be connected to the power supply ground (DGND). See chapter 2.3 Protection for detailed information about ground connections.



NOTICE!

If the VT System supply ground DGND, the reference ground AGND or the ECU ground is not correctly connected, the VT System will not return any meaningful measurement values. Insufficient ground connections may also cause damages on the VT System!

Connecting to the PC

The PC is connected to the first VT System rack with an Ethernet cable (cross or patch). CANoe must be running on the PC in order to use and operate VT System. If you use a Real-time Module VT6000, the backplane is connected to the VT6000 and the VT6000 to the user's PC. For details refer to chapter 16.2 Installation.

Connecting the VT System to the PC using a switch or a router is not supported, even if this is in principle possible with many devices (switch/router, depending on their configuration).

Using the same PC Ethernet port for VT System and other connections (e.g. to a company network) is also not supported. In principle, it is often possible to use a switch to do this, but in practice this will burden the company network and reduce the VT System's real-time capacity. In this case it is not possible to connect another VT System within the same company network because CANoe will not be able to differentiate between the two VT Systems.



Important Note

Always use the right Ethernet plug of the backplane (see view of rear, see chapter 24.3 External Connectors) to connect the VT System to the PC. Often, the left plug seems to work also, but the communication will not be reliable.

EMC Protection

Any number of slots can be used in one rack. It is possible, for example, to use every other slot as this improves heat dissipation. For EMC (electromagnetic compatibility) reasons, any gaps at the front should always be closed with a cover plate.

The length of each cable connected to the VT System (excl. Ethernet cable) should not exceed 3 m. This is recommended to fulfill the rules of electro-magnetic and high frequency emission under all circumstances.

It is recommended to connect the system housing (rack) to ground (earth) to enhance ESD (electro static discharge) protection.



Important Note

To ensure compliance to EMC rules it was necessary to use ferrites in all cables to the VT System. With the VT8006B and the VT8012B those ferrites are no longer needed as additional EMC measures are implemented on the backplanes.

2.1.4 Cascading Several VT System Racks

Several racks can be cascaded using the second plug on the backplane. This is done by using an Ethernet cable to connect the second Ethernet connector on the backplane with the PC input of the next backplane. See chapter 24.3.4 Ethernet Connectors for the position of the connectors.

Theoretically, more than 10 racks can be cascaded in this way. In practice, however, installing so many racks is useless, because it becomes impractical to handle so many modules and channels in CANoe.

2.2 Normal Usage

The VT System is a test system for executing functional tests on automotive ECUs in the laboratory. The system is not suitable for use in vehicles or industrial settings.

Test systems based on CANoe and VT System have to be designed and configured by experts familiar with testing automotive electronics.



WARNING!

Danger due to excessive voltages!

The use of impermissible voltages at the inputs of the VT modules can lead to serious injury or death due to electric shock.

- Only use voltages at the inputs of the VT modules that do not exceed the maximum permissible values:
  - 30 V_{RMS} / max. 42.4 V_{AC} for AC voltage
  - max. 60 V_{DC} for DC voltage



NOTICE!

You must take this notice into consideration when working with the VT System!

The VT System supports a wide range of test scenarios, including creation of short-circuits. It is therefore essential that you exercise utmost when connecting and operating the VT System and when scripting tests, so that the VT System and the ECU under test never operates beyond its specified limits.

Vector will not be liable for any damages caused by inappropriate operation of the system.

Environment Conditions

- Operating altitude of up to maximum: 2000 m above sea level.
- Humidity: 20 ... 80% (non-condensing)
- Ambient temperature: 0 ... +50 °C
- Storage temperature: -40 ... +85 °C
- IP protection class: IP00

2.3 Protection

CANoe and VT System contain several safety measures, e.g. suppression of forbidden states or electrical fuses at the inputs. However, because VT System supports a wide range of test scenarios and very different applications and systems under test, it cannot be guaranteed that the VT System

and the connected ECUs will remain undamaged in case of operator error or operation that does not comply with the specifications. The information in this manual and in the documentation delivered with CANoe will help you to ensure that the system is not operated beyond its specified limits.

2.3.1 Safety Functions in CANoe

Constraints can be defined in the VT System configuration of CANoe. They are used to prevent faulty setting of the VT System and thus to protect the VT System and its hardware from damage. You can prevent for example opening a specific relay while a high voltage is measured on defined channel. Or you can limit the output voltage if your ECU under test cannot be stimulated with higher voltage.

You should use the constraints in the VT System configuration to prevent test scripts and operators from switching to potentially unsafe states in your test system and from setting forbidden output values.

2.3.2 Fuses

Most channels are protected by a fuse in the main current path (typically pin a). Resettable fuses (polyfuse) or lead fuses are used. Polyfuses reset themselves after a short time of cooling down. Lead fuses are supervised by the module and must be replaced by the user when blown.

While the fuses help to protect the module and the system under test, the following facts must be taken into consideration:

- Fuses are designed for accidental errors. They are not suited for simulation of errors. Especially the polyfuses are designed for occasional faults only.
- The fuses are designed to sustain the highest possible currents. But not all features of a module are designed for the same maximum current. Therefore, the fuse cannot protect the module in any situation. The current carrying capacity for example is typically much higher than the current that can be switched off by the relays at high voltages.
- Fuses and other protection measures do not define the limits of the module. Always regard the limits specified in the documentation.
- Several signal paths can be used on the modules. There may be also some signal paths without any fuse within the signal path (e.g. ECU pin b to original load pin b on the VT1004).

2.3.3 Inductive Loads

In general, inductive loads generate high voltage peaks at the switches when current is switched off. The resulting electric arcs damage or destroy the relays used for switching. Typically, countermeasures like diodes are used. Please regard that measures that are part of the ECU typically cannot protect the VT System. Therefore, additional countermeasures must be taken into account to protect the VT System. The VT System has to be operated always within its specified limits.

2.3.4 Capacitive Loads

A similar problem exists for capacitive loads. Here mainly overcurrent can destroy relays when the capacitive load is switched on. Typically, the fuses of the VT System modules are to slow to protect the relays. But countermeasures of the ECU often work also if the load is switched by the VT System. Nevertheless, you have to check carefully that the specified limits of the VT System are always fulfilled.

2.3.5 Parallel Circuit of Channels

Using two or more channels in parallel to use higher currents is not recommended especially because of the following reasons:

- Currents will not be equal in the parallel channels because of slightly different contact resistances of the plugs, the relays, and the board.
- Relays never open or close in exactly the same moment. Therefore, full current will flow over the slower relay for a short time when relays are switched off. This may cause damages on the module and destroy the relay.
- Some features like the electronic load on the VT1004 cannot be used in parallel because the cyclic control loop will not work properly.

2.3.6 ESD Protection Devices

Some capacities and resistors are connected to the measurement plugs on the front because of ESD (electro static discharge) protection needs. They are shown in the circuit diagrams of the modules in this manual. The capacities may influence the signals, especially high frequency signals. Therefore it may be not feasible to use for example the relays of a VT2004 to switch high-speed CAN signals.

2.3.7 Noise and Cross Talk

Noise and other disturbance signals can be coupled into the tracks on the printed circuit boards of the VT modules and the harness to the ECU, original loads, sensors, and other test equipment. Additional some crosstalk between the lines can be observed. Switching on and off high power loads, especially power supplies, near the VT System can cause some peaks on the cables of the test harness.

The same error signals (and more) can be observed in a car. Typically, the inputs and outputs of automotive ECUs don't have any problems with such noise and peaks. Therefore, there is no need to pay special attention to these effects when testing ECUs with VT System.

If the VT System is directly connected to internal signals of an ECU (e.g. pins of a MCU chip) or to other sensitive electronics, it may be necessary to use additional protection. For example a Z diode (signal line against ground) near the pin of the device under test may protect the device from high voltage peaks. The appropriate circuit depends from the concrete situation, of course.

2.4 Supply Voltage and Ground

In a test system based on the VT System at least two supply voltages exist:

- VT System supply voltage (V_{VT})
  12 V supply voltage to run the electronics of the VT System modules. The modules are supplied via the backplane, the VT System rack is feed with V_{VT} via the power supply connector at the backplane (see chapter 24.3.1 Power Supply Connector).
- ECU supply voltage (V_{batt})
  This supply voltage powers the ECU under test. In the car this voltage is supplied by the battery. Therefore the ECU supply voltage is often called battery voltage. Typically, V_{batt} is generated by a separate power supply and controlled by the Power Module VT7001.

Three different ground potentials exist:

- Ground of VT System logic (DGND)
  This ground belongs to V_{VT}, i.e. the power supply of the VT System itself. Because the VT System electronics mainly consists of digital logic, this ground is called digital ground DGND. Like V_{VT} it is connected to the power supply connector of the backplane.
- ECU ground (ECU GND or just GND)
  ECU ground belongs to the power supply of the ECU under test, it is the ground of V_{batt} and correspond to the ground potential of a car.
- Reference ground for analog measurement (AGND)
  AGND is the reference potential used by the VT System for all kinds of measurement. Thus, ECU output voltages (output signals) are measured against AGND instead of DGND. No significant currents flow over AGND, therefore measurement is more exact than using DGND directly.

The potential of the three grounds can be different. They are separated to enhance accuracy of measurement and to avoid ground loops.

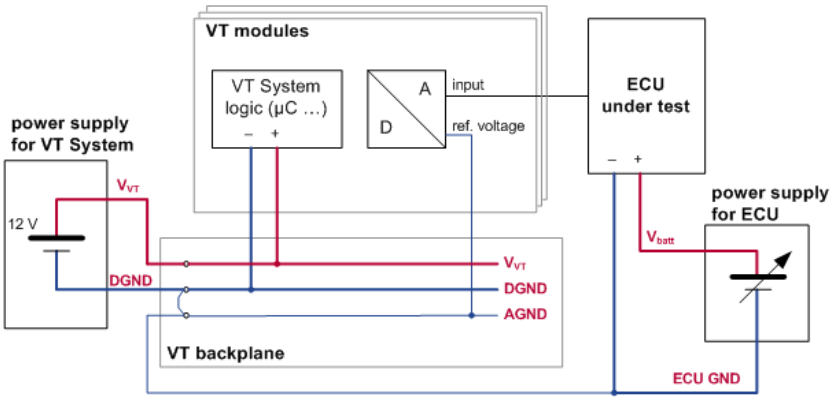

Figure **1:** General overview

2.4.1 Rules

You have to setup your VT System according to the following rules:

- > V_{VT} and DGND must be connected to the backplane of the VT System rack (pins +12V and GND).
- > DGND must be connected to AGND.
- > ECU ground must be connected to AGND.
- > ECU ground must be connected to the AGND and AGND must be connected to DGND at exactly one point in the system to avoid ground loops. Typically, the grounds are connected together at the power supply plug of the first VT System rack (in a system without VT7001) or automatically within the first VT7001 (see chapter 20.3.8 Ground Connection).
- > If several VT System backplanes are cascaded, DGND and AGND of the first backplane must be connected to DGND and AGND of every other backplane. But AGND and DGND should only be connected at one point (e.g. in the power plug of the first backplane or automatically within the first VT7001).
- > Connection of ECU ground at the bus bar connector is mandatory for some modules (e.g. VT2516). You have to establish this connection always before first power on of your VT System.
- > AGND and DGND can also be connected by a relay on the VT8006B and VT8012B (see chapter 24.4 Ground Connection Relay).

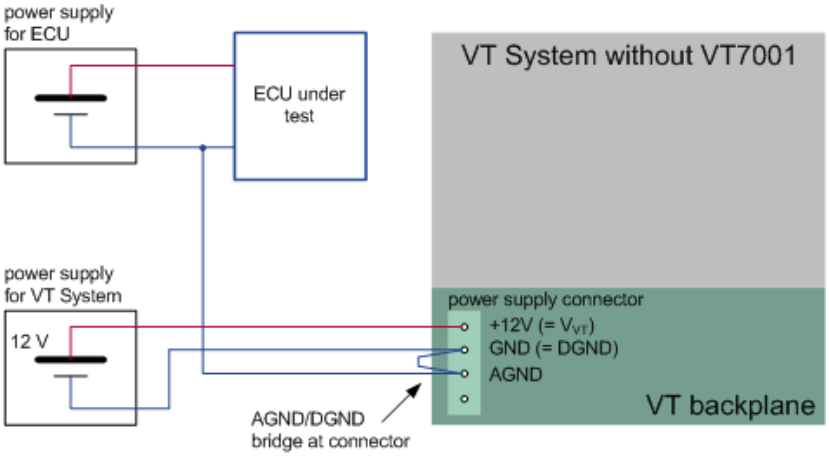

Figure **2:** Power/ground setup (without VT7001)

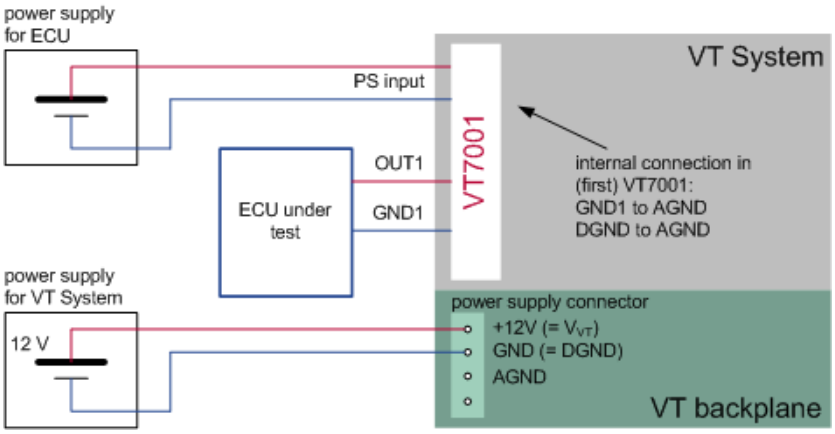

Figure **3:** Power/ground setup (with VT7001)

2.5 Bus Bars

Some VT System modules have one or two internal bus bars for arbitrary use. The bus bar of each module can be used separately or can be connected to produce one common bus bar over all channels. Using a common bus bar, you can create short-circuits between arbitrary pins of the ECU, for example.

Some modules have dedicated connectors for ECU V_{batt} and ECU ground but only one bus bar (e.g. VT2516), others have only two bus bars (e.g. VT1004). It is recommended to connect **bus bar 1** at modules with two bus bars to ECU V_{batt} and ECU ground. This makes it possible to generate short-circuits of channel lines to V_{batt} and ground on all modules.

To support this kind of setup, the pins of **bus bar 1** and dedicated V_{batt} and ECU ground connectors are almost in the same place at most modules. The same is valid for the pins of **bus bar 2** (or the single bus bar if only one is provided).

2.6 Time Synchronization

The internal time bases of CANoe, the VT System, and Vector network interfaces can be synchronized to a common time reference. All VT System modules within the same backplane are internally synchronized via EtherCAT®. For VT network devices, additional synchronization settings or hardware connections may be required depending on the selected synchronization method and system setup.

For new configurations, driver-based time synchronization is recommended, as it provides higher flexibility and supports mixed synchronization setups. The legacy synchronization methods remain available for compatibility with older hardware.

2.6.1 Driver-Based Time Synchronization

Driver-based time synchronization is configured via the Vector Hardware Manager and is the recommended synchronization method for VT Systems. It supports PTP, hardware-based and software-based synchronization, as well as mixed synchronization setups.

- At least one compatible network interface is required to generate or provide the synchronization signal.
- VT System modules within the same rack are synchronized internally via the backplane and EtherCAT®.

- External network interfaces must be connected to the VT System using a Party Line / HW Sync connection.
- Driver-based synchronization supports mixed setups, such as combining PTP with hardware synchronization through a compatible VN interface.



Cross Reference

For detailed information about the configuration and setup of driver-based time synchronization, refer to the Vector Hardware Manager Help | **Infrastructure Time Sync**.

PTP Synchronization with VT6000 Devices

Although direct PTP synchronization of VT Systems is not supported yet, the VT6000 devices provide a dedicated workaround:

- A VT6000 device can participate in a PTP-synchronized setup when configured accordingly (installed **vxlApiNic drivers** of the **26.10 Vector Driver Disk**)
- A PTP-capable VN interface with Hardware Sync support (e.g., VN5620A) is connected to the `VT6000` device.
- The VN interface acts as the synchronization bridge between PTP and VT hardware synchronization.
- The Hardware Sync connection must be connected to the VT System backplane to synchronize the complete setup.

This enables synchronization of the entire VT System within a PTP-based environment.

Hardware Synchronization Roles

The following VT System modules can be used as masters/slaves for hardware synchronization:

HW Sync Masters	HW Sync Slaves
> VT6104B > VT6204B > VT6306 / VT6306B	> VT6104B > VT6204B > VT6306B > VT7001 / VT7001A / VT7101 > VT8006B / VT8012B

HW sync master and slave modules within the same backplane are connected internally. If modules are distributed across multiple backplanes, an additional sync line is required (typically Trigger 1 / Sync Signal to GND between backplanes).

Other Vector network interfaces (e.g., VN1630) can be synchronized via the sync connector of a HW sync-capable VT System module. A VT System without a HW sync-capable module cannot be hardware synchronized with external interfaces.

2.6.2 Legacy Mode

Legacy Hardware Synchronization

Legacy hardware synchronization remains available for older interfaces that do not support driver-based synchronization (e.g., VT6104A). In this case, driver-based synchronization modes must not be active in the Vector Hardware Manager, and hardware synchronization must be enabled in CANoe.

The following VT System modules can be used as masters/slaves for hardware synchronization:

HW Sync Masters	HW Sync Slaves
> VT6104 / VT6104A / VT6104B > VT6204 / VT6204B > VT6306 / VT6306B	> VT6104 / VT6104A / VT6104B > VT6204 / VT6204B > VT6306 / VT6306B > VT7001 / VT7001A / VT7101 > VT8006B / VT8012B

Software Synchronization

If hardware synchronization is not available, software synchronization aligns the time bases of CANoe and the VT System with reduced accuracy. Although combining hardware- and software-based synchronization is technically possible, this is not recommended due to reduced synchronization accuracy.

2.7 Firmware Update

New versions of CANoe may require a new firmware version for the used VT System modules. Modules with newer firmware can also be used together with older CANoe versions. Nevertheless, it is not necessary to update the VT modules with a firmware version newer than the one provided with your CANoe version.

Firmware of the VT System modules can be updated using a utility program delivered with CANoe. Your CANoe installation also contains a firmware version for each module that fits to that CANoe version.

Please refer to the online help of CANoe for further information about firmware update of VT System.



Cross Reference

The latest version of the VT System Firmware Updater can be found in the CANoe installation (start menu | **CANoe** | **Tools**).

2.8 Calibration

All VT System modules are designed so that non-defective modules comply with the specified technical data. Adjustment and factory calibration have been carried out accordingly. The calibration values correspond to the technical data in this manual.

Calibration can be carried out to check whether the technical data is complied with. The **VTSystem_Calibration_TestSpecification_EN.pdf** instructions can be used for this purpose. Corresponding test protocols are provided for this purpose in the file **VTSystem_Calibration_TestProtocol.xls**. By entering the test results, it is automatically displayed whether the technical data, including limit values, are complied with. If these are not met, an adjustment and calibration can be carried out using the VT System Calibration Manager. This is possible in different ways.

Internal Adjustment

The internal adjustment routine (self-adjustment) uses the built-in voltage references that are already present on the modules and, depending on the signal type, additional VT modules.

As no additional devices are required for this adjustment, this routine can be carried out very easily.

External Adjustment

As the accuracy of an adjustment depends on the accuracy of the reference signals and measuring devices used, there is an other type of adjustment.

External adjustment requires external signal references and additional measuring devices. The accuracy should at least correspond to the accuracy of the technical data.

The files **VTSystem_Calibration_TestSpecification_EN.pdf** and **VTSystem_Calibration_TestProtocol.xls** can also be used for this purpose.



Cross Reference

The latest version of the VT System Calibration Manager can be found in the CANoe installation (start menu | **CANoe** | **Tools**).

2.9 Checklists

2.9.1 Before Initial Operation

The following checklist summarizes important points that should be considered before initial operation of the VT System:

- Is power supply for VT System connected properly (+12V, DGND at backplane)?
- All ground connections ok?
- ECU ground connected to AGND?
- AGND connected to DGND?
- Mandatory ECU ground connected to ECU ground (if mandatory ECU ground connections exist, e.g. on VT2516)?
- Are all additional devices (e.g. original loads) and the required bus bars connected properly?
- Hardware synchronization of Vector network interfaces needed?
  If yes, is the VT System also connected to the sync cable?
- PC with CANoe connected to the backplane or to the VT6000?

2.9.2 Before Connecting an ECU for Testing

The following checklist summarizes important points that should be considered before an ECU is connected to the VT System for testing:

- Can the ECU generate currents or voltages beyond the limits of the VT System (e.g. by switched inductive loads, see chapter 2.3 Protection)?
  If yes, are adequate countermeasures installed?
- Are ECU inputs very sensible against peaks (see chapter 2.3 Protection)?
  If yes, are appropriate countermeasures installed?
- Double-check the test sequences to prevent forbidden states (e.g. unintended short-circuits)? Possibly you can use the safety functions in the VT System configuration to ensure safe operation.
- If you want to use the voltage stimulation of the VT2004:
  Is pin b of the ECU connector connected to a reference potential (e.g. ECU ground)?

3 VT1004/VT1104 – Load and Measurement Module

In this chapter you find the following information:

3.1 Purpose **40**
3.1.1 VT1004A 40
3.1.2 VT1104 40
3.1.3 VT1004A FPGA 40
3.2 Installation **40**
3.3 Usage **41**
3.3.1 Basic Connection Scheme 41
3.3.2 Signal Path Switching 42
3.3.3 Using the Bus Bars 43
3.3.4 Measurement 44
3.3.5 Electronic Load 44
3.3.6 Displays 46
3.3.7 Fuses 47
3.4 Connectors **47**
3.4.1 ECU Connector 47
3.4.2 Original Load Connector 48
3.4.3 Bus Bar Connector 49
3.4.4 Front Panel Measurement Connector 50
3.5 Technical Data VT1004A **51**
3.5.1 General 51
3.5.2 Input Signals and Switches 51
3.5.3 Electronic Load 52
3.5.4 Voltage Measurement 52
3.5.5 Digital Input 54
3.5.6 PWM Measurement 54
3.6 Technical Data VT1104 ..... **56**
3.6.1 General 56
3.6.2 Input Signals and Switches 56
3.6.3 Electronic Load 57
3.6.4 Voltage Measurement 57
3.6.5 Digital Input 59

3.6.6 PWM Measurement 59

3.1 Purpose

3.1.1 VT1004A

The Load and Measurement Module VT1004A is connected to up to four outputs of an ECU, which drive in real in-vehicle operation actuators such as lamps or servo motors. The VT1004A provides several features to check the ECU behavior regarding these four ECU outputs:

- Measurement of the ECU output voltage and pre-processing of the measurement values (e.g. RMS values, average values)
- Measurement of the ECU output PWM parameters (e.g. frequency, duty cycle, high/low voltage)
- Time measurements by setting individual trigger conditions
- Simulation of the actuator by an internal electronic load
- Relays to connect the ECU output to the original actuator
- Relays to generate electrical errors like short circuits between the ECU output lines and ECU ground or V_{batt}

3.1.2 VT1104

The Load and Measurement Module VT1104 is a 60 V capabable version of the VT1004A. Therefore, most relays were changed to solid state relays and the measurement ranges were adjusted accordingly.

3.1.3 VT1004A FPGA

Basically the VT1004A FPGA has the same hardware functionality and features as the VT1004A and is therefore used like the standard VT1004A. Additionally, the VT1004A FPGA provides a second, dedicated FPGA, which has access to the VT System module's hardware and CANoe. It can be used for implementing custom functionality.

More information about the FPGA variants of the VT System modules can be found in chapter 26 User Programmable FPGA.

3.2 Installation

Please follow the general installation instructions in chapter 2.1.2 Modules.

3.3 Usage

3.3.1 Basic Connection Scheme

The connectors located above the backplane on the rear of the module can be used to make the following connections:

> **Connecting the ECU**:
The four ECU connections (e.g. for controlling lamps, motors or other actuators) can be connected via two lines each. This must always be a two-wired connection, even if the ECU only has one output pin. If this is the case, the ground of the intended actuator must be applied to the other pin.
Some typical configurations are:

	VT1004A/VT1104 pin a	VT1004A/VT1104 pin b
Reference potential ground (e.g. high side switch in ECU)	ECU connection	Ground (ECU ground!)
Reference potential V_{batt} (e.g. low side switch in ECU)	V_{batt}	ECU connection

> **Connecting the original loads (optional)**:
Two-wired connectors are also provided for the original loads (= original actuators). However, only Line **a** is switched. Breaking this line should switch the actuator to a completely passive state. This is always the case for actuators that are connected only via these two lines. If the actuator is also connected e.g. to the ECU's supply voltage, this needs to be checked.
External load simulations can also in principle be connected to the original load connectors. If this is done using a one-sided line break, it is necessary to check carefully that disconnection is complete.

> **Bus Bar 1**:
The ECU's supply voltage (pin a) and ground (pin b) are typically connected to bus bar 1. This makes it possible to create short circuits to ground and V_{batt}. Just like bus bar 2, bus bar 1 can also be used to for other purposes if short circuits to ground/ V_{batt} are not needed.

> **Bus Bar 2**:
Bus bar 2 is used to extend the system by adding other external devices. An additional device, such as a high performance electronic load or a special measurement device can be connected to bus bar 2.
Lines a and b of all included VT1004A/VT1104 modules are typically interconnected (bus wiring) and then connected to the external device. We recommend doing so. If needed, of course, it is possible to form groups or to connect devices only to a bus bar on one single module.

Bus bars can also be used to create short circuits between the lines of different ECU channels. In this case the bus connections **a** and **b** of all modules (including other VT modules such as the VT2004A Stimulation module) are once again interconnected. A further external device cannot be connected in this case.

The cabling is done using Phoenix connectors, making it easy to switch them around. The test system can therefore be easily used for different ECUs, simply by connecting a different ECU cable (connecting the VT module to the ECU to be tested).

3.3.2 Signal Path Switching

The figure below shows the various signal paths and switching options for one channel on the VT1004A/VT1104. There are four such independent channels.

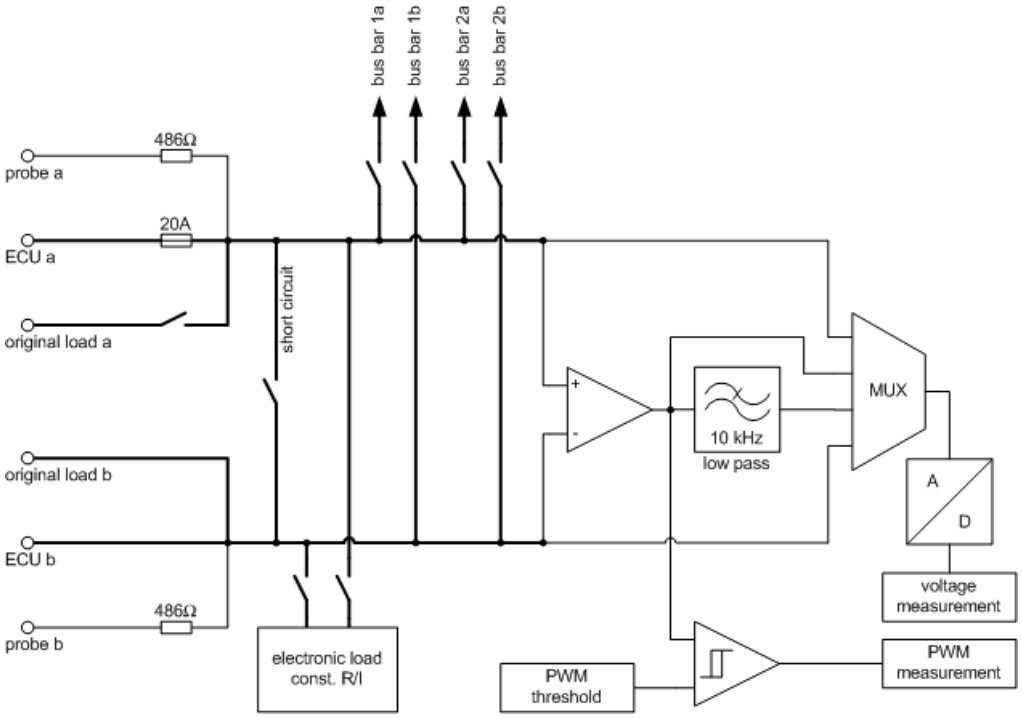

Figure **4:** Signal paths and switching options

The connections shown in bold are specially configured for high performance and can carry higher currents. As can easily be seen, the only place it is not possible to carry higher currents is at the front connectors, which are merely configured as measurement connectors with a resistor to the ECU connectors for safety reasons.

For the VT1004A different threshold values apply for currents to be switched via closed relay contacts and via the relays. These threshold values must be adhered to particularly when switching under load, as the relay contacts will fuse otherwise. In the case of closed relay contacts, an overload leads to severe warming of the module.

As the VT1104 uses solid state relays there is no special limitation for switching under load. Only the electronic load still uses electromagnetic relays. This is no limitation as it is generally not advisable to disconnect the electronic load while it is activated.

NOTICE!

The following threshold values must be adhered to when current is supplied to the module, and especially when switching under load:

Switching action	Voltage via open relay	Maximum current with (still) closed relay
VT1004A: Continuous current with closed relay	—	16 A

Switching action	Voltage via open relay	Maximum current with (still) closed relay
VT1004A: Current with closed relay for a maximum of 10 seconds	—	30 A
VT1004A: Switching under load	≤ ±18 V	25 A
	≤ ±32.7	8 A
	≤ ±40 V	4 A
VT1104: Switching under load	≤ ±60 V	25 A

NOTICE!

Overvoltage over 50 V for the VT1004A and over 60 V for the VT1104 has to be strictly avoided because the module may be damaged. Please consider this especially for inductive loads. To avoid overvoltage you may use a free-wheeling diode, for example.

3.3.3 Using the Bus Bars

The VT1004A/VT1104 has two independent internal bus bars:

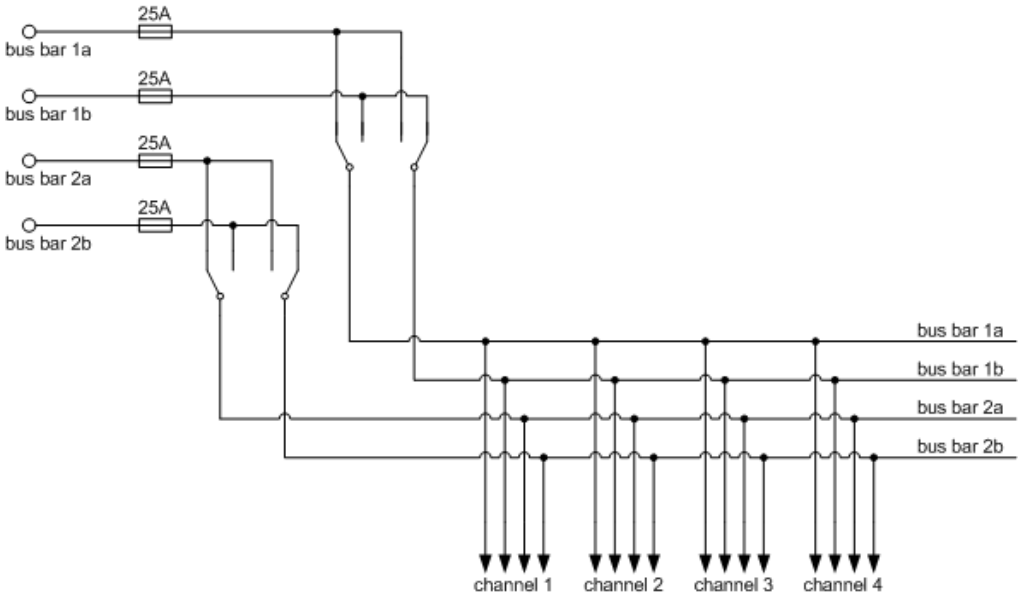

Figure **5:** Internal bus bars

Typically, bus bar 1 is connected to ECU V_{batt} and ECU ground. This makes it possible to generate short-circuits of channel lines to V_{batt} and ground. But bus bar 1 may also be used for other purposes.

At the VT1004A/VT1104 the two relays of each bus bar to switch the polarity of the bus bar (bus bar switch relays) can be switched independently. This makes it possible, for instance, to apply the signal at bus bar connection **b** to both internal bus bar lines (relay **a** is switched → **ab**). For example, channel lines **a** and **b** can both be shorted to ground in this way.

The maximum permissible load for the bus signal paths and relays corresponds to the values given for the channel switching options.



NOTICE!

Using the bus bars several connections from one connector to another connector of the module are possible. Carefully avoid short-circuits or any kind of overload using these signal paths. This may damage the relays of the module or the module itself.

3.3.4 Measurement

Voltage Measurement

The VT1004A/VT1104 measures voltages continuously, prepares the results, and returns the corresponding momentary values as well as average values, rms values, and min./max. values in CANoe. The integral time for this can be set in CANoe.

There are four different measurement modes, which can be selected:

- Differential voltage between line **a** and line **b** unfiltered
- Differential voltage between line **a** and line **b** with a 10 kHz low-pass filter
- Voltage between line **a** and **ECU ground**
- Voltage between line **b** and **ECU ground**

Digital Input

The digital input state of each channel is sampled continuously every 50 µs. A threshold, which can be set for every channel individual, is used to differentiate between the **High** and **Low** states. The current state and an array with the last 20 sampled values are made available to CANoe.

PWM Measurement

The module can also handle PWM signals. The relevant parameters like frequency, duty cycle and high/low levels are measured and the result is made available to CANoe.

For the VT1004A/VT1104 it is possible to select the input impedance. Using the low impedance mode results to a more accurate frequency and duty cycle measurement, but also leads to a higher load for the connected ECU output.

It is also possible to set individual trigger conditions and measure the time between the trigger events. For more detailed information on the trigger possibilities, refer to the CANoe help.

3.3.5 Electronic Load

The electronic load applies an electronic regulated current between the two ECU lines, which can be controlled to hold a constant resistance value or a constant current. The resistance mode is based on the current mode. For a proper operation of the resistance mode the possible current range of the current mode must be considered. The electronic load can only handle positive signals. Hence, the voltage potential on both input lines must be positive compared to ECU ground. The relative voltage potential between the lines a and b can also be negative, as long the absolute potential is higher than ECU ground. If not, the electronic load switches off automatically.

The power dissipation of the electronic load is limited by the heat sink. Therefore, an adequate circulation of the air or a cooling fan inside the rack will increase the continuous power dissipation of

the internal load. The peak power dissipation is thereby much higher than the continuous power dissipation. The module switches off and the measurement in CANoe will be stopped if the cooling element exceeds the defined maximum temperature. The measurement can then be re-started again after a fixed cooling down period of one minute.

3.3.6 Displays

LEDs

The current state of the relay switching for all four channels is indicated by LEDs on the front panel.

LED	Description
Original Load	...lights up when the ECU lines are switched to the original load output.
Short Circuit	...lights up when the short circuit relay is switched.
Internal Load	...lights up when the internal load is switched to the ECU lines.
Bus Bar	...the left LED lights up when at least one line is switched to bus bar 1; the right LED lights up for bus bar 2.

For all four channels, there are two LEDs on the front panel that indicate whether the voltage between the two pins is positive or negative.
These two LEDs are located between the two measurement connectors:

LED	Description
RED LED	Positive voltage greater than +3 V is applied
BLUE LED	Negative voltage below -3 V is applied
RED and BLUE LED	If mixed signals with components greater than +3 V and less than -3 V are applied, both LEDs light up.

The four LEDs in the lower part of the front panel indicate the state of the bus bar relays; the two left-hand LEDs are for bus bar 1 and the two right-hand LEDs for bus bar 2.

LED	Description
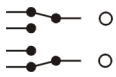	The bus bar lines are routed to the module in an unmodified state.
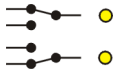	The bus bar lines are swapped. Bus bar connection pin **a** is applied to internal bus bar line **b**; pin **b** to internal bus bar line **a**.
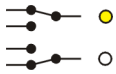	Bus bar connection pin **b** is applied internally to both bus bar lines. In this way, both lines of a channel can be short circuited against ground if V_{batt} /ground is connected to this bus bar.
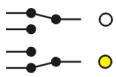	Bus bar connection pin **a** is applied internally to both bus bar lines.

Error Messages

The following errors can be indicated:

- **Short Circuit** blinks when the fuse is defective.
  This state is exited only after the VT System has been switched off and on again.
- **Internal Load** blinks when the module has switched off due to overheating.
  In addition, the measurement is stopped in CANoe.
  After a fixed waiting period of one minute to get the internal load cooled down, the measurement can be restarted in CANoe.

3.3.7 Fuses

On all four channels the ECU input pin a is protected by a 20 A fuse (standard car fuse of type FKS 19mm). The fuse helps to protect the channel from overcurrent. But it does not define the current limit of the module and it does not ensure that the module is protected in every case!

The four lines of the bus bar are also protected with a 25 A lead fuse each. These fuses are only to prevent the module from irreparable damage. These fuses are not supervised and are directly soldered on the module.

The module supervises the fuses. Which channel is affected is shown by the front LEDs. In this case switch off the VT System and remove the connectors from the rear of the VT1004A/VT1104. Remove the module from the system and replace the fuse. The fuse is plugged in and can be replaced without soldering. The fuse near the backplane connector is the fuse of channel 4.

3.4 Connectors

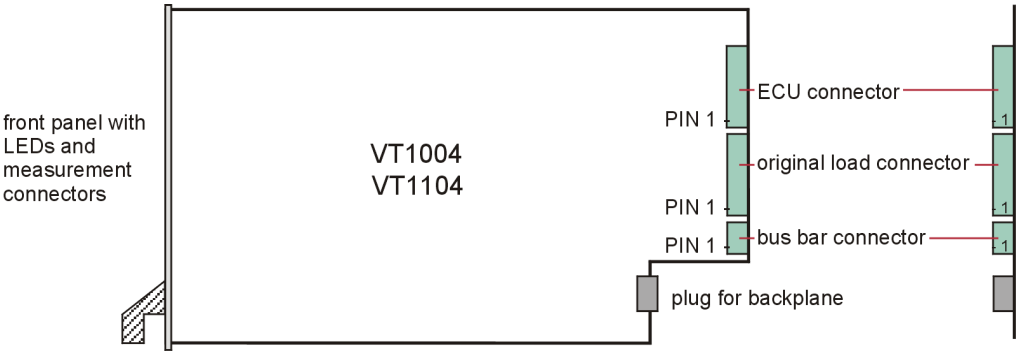

Figure **6:** Connectors

3.4.1 ECU Connector

Plug type: Phoenix Contact MSTB 2,5 HC/8-ST-5,08

Plug allocation (from top to bottom, viewed from the rear after installation):

Pin	Description
8	channel 1, ECU pin a
7	channel 1, ECU pin b
6	channel 2, ECU pin a
5	channel 2, ECU pin b
4	channel 3, ECU pin a
3	channel 3, ECU pin b
2	channel 4, ECU pin a
1	channel 4, ECU pin b

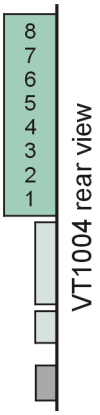

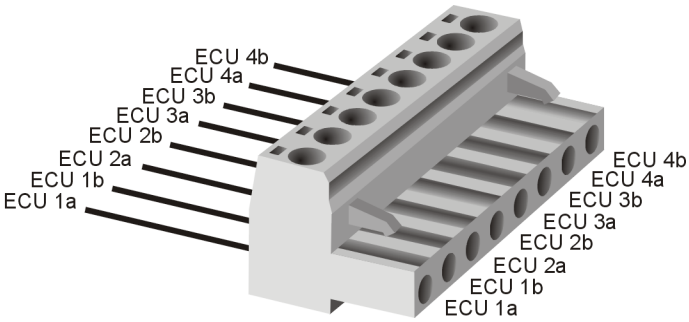

Figure **7:** ECU connector

3.4.2 Original Load Connector

Plug type: Phoenix Contact MSTB 2,5 HC/8-ST-5,08

Plug allocation (from top to bottom, viewed from the rear after installation):

Pin	Description
8	channel 1, original load, pin a
7	channel 1, original load, pin b
6	channel 2, original load, pin a
5	channel 2, original load, pin b
4	channel 3, original load, pin a



Pin	Description
3	channel 3, original load, pin b
2	channel 4, original load, pin a
1	channel 4, original load, pin b

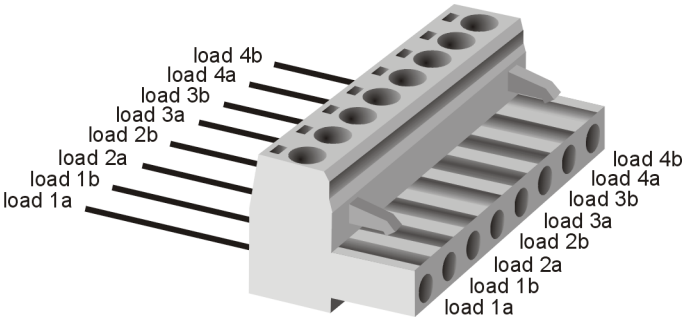

Figure **8:** Original load connector

3.4.3 Bus Bar Connector

Plug type: Phoenix Contact MSTB 2,5 HC/4-ST-5,08

Plug allocation (from top to bottom, viewed from the rear after installation):

Pin	Description
4	Bus bar 1, pin a
3	Bus bar 1, pin b
2	Bus bar 2, pin a
1	Bus bar 2, pin b

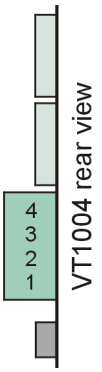

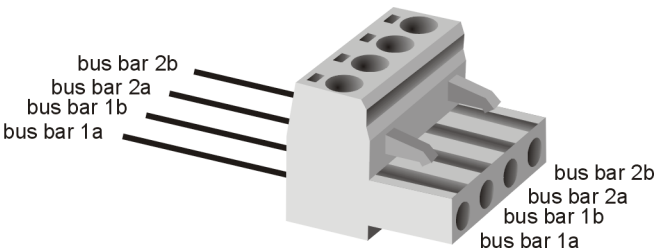

Figure **9:** Bus bar connector

3.4.4 Front Panel Measurement Connector

There are two measurement connectors (2 mm) on the front panel for each of the four channels on the circuit board (view on front panel after installation):

Pin	Connector	Description
1	Upper connector	ECU measurement output pin a
2	Lower connector	ECU measurement output pin b

3.5 Technical Data VT1004A

3.5.1 General

Parameter	Min.	Type	Max.	Unit
Supply voltage (via the backplane)	10.8	12	13.2	V
Power consumption at 12.0 V, no special function like electronic load enabled > all relays off > 10 relays switched on		 4.5 20		 W W
Temperature range	0		+55	°C
Dimensions (length × width × depth)	300 x 173 x 36			mm
Total weight	approx. 1150			g

3.5.2 Input Signals and Switches

Parameter	Min.	Type	Max.	Unit
Input voltage > pin a to pin b > pin a against ECU ground (AGND)	 -40 -40		 +40 +40	 V V
Impedance (pin a to pin b, pin a against ECU ground) > Low impedance mode > High impedance mode	 100 1			 kΩ MΩ
Carrying current (per channel) > Continuous current > Peak current for ≤ 10 s			 16 30	 A A
Switching current (per channel, resistive load) > at voltage, pin a to b ≤ ±18 V > at voltage, pin a to b ≤ ±32.7 V > at voltage, pin a to b ≤ ±40 V			 25 8 4	 A A A
Fuse (standard automotive type FKS 19 mm)		20		A
Contact resistance (pin a to pin b, short-circuit relay closed)		10	20	mΩ

3.5.3 Electronic Load

Parameter	Min.	Typ.	Max.	Unit
Constant current mode > current range > accuracy ± (% of value + offset)	 0.1 -(0.5 + 50 mA)		 10 +(0.5 + 50 mA)	 A
Constant resistor mode > resistance range > accuracy ± (% of value) (at current ≥ 0.5A) > accuracy ± (% of value) (at current ≥ 1.0A) > recommended current range	 1.5 0.1		 400 10 5 10	 Ω % % A
Input voltage (pin a to b) > at current 0.1 A > at current 10 A > input voltage low side against ECU ground (AGND) > input voltage high side against ECU ground (AGND)	 ±3.0 ±7.5 0 0		 ±40 ±40 28 40	 V V V V
Dynamic > settling time to required value			 30	 ms
Power rating (at 23±5°C) > Continuous load (all channels together) > Peak load (≤ 2 s, single channel)		 30	 120	 W W

3.5.4 Voltage Measurement

Parameter	Min.	Typ.	Max.	Unit
Measurement range (high and low impedance) > pin a to pin b > pin a against ECU ground (AGND)	 -40 -40		 +40 +40	 V V
A/D converter > Resolution > Sample rate for raw data (per channel)		 16 250		 Bits kSamples/s
Accuracy at 23±5°C, ±(% of value + offset)	-(1.2+80 mV)		+(1.2+80 mV)	

The accuracy of a measured voltage depends on two parts (% of value + offset). The first part (relative value) depends on the measured value; the second part (absolute value) is a fixed offset voltage.

As an example, if you measure a voltage of -5 V, you get an accuracy of ±140 mV (1.2 % of 5V + 80 mV).

3.5.5 Digital Input

Parameter	Min.	Typ.	Max.	Unit
Threshold voltage	-32.7		+32.7	V
Threshold resolution		250		mV
Sampling interval		50		µs

3.5.6 PWM Measurement

Low Impedance Mode

Parameter	Min.	Typ.	Max.	Unit
PWM frequency	0.00002		200	kHz
PWM frequency accuracy > at PWM frequency ≤ 200 kHz > at PWM frequency ≤ 100 kHz > at PWM frequency ≤ 10 kHz > at PWM frequency ≤ 1 kHz			 2 1 0.1 0.01	 % % % %
PWM duty cycle range > at PWM frequency ≤ 200 kHz > at PWM frequency ≤ 100 kHz > at PWM frequency ≤ 10 kHz > at PWM frequency ≤ 1 kHz	 20 10 5 1		 80 90 95 99	 % % % %
PWM duty cycle tolerance (input threshold level set to 50 % of signal voltage) > at PWM frequency ≤ 200 kHz > at PWM frequency ≤ 100 kHz > at PWM frequency ≤ 10 kHz > at PWM frequency ≤ 1 kHz			 15 10 1.5 0.2	 % abs % abs % abs % abs

High Impedance Mode

Parameter	Min.	Typ.	Max.	Unit
PWM frequency	0.00002		25	kHz
PWM frequency accuracy > at PWM frequency ≤ 25 kHz > at PWM frequency ≤ 15 kHz > at PWM frequency ≤ 10 kHz > at PWM frequency ≤ 1 kHz			 0.2 0.2 0.1 0.01	 % % % %
PWM duty cycle range > at PWM frequency ≤ 25 kHz > at PWM frequency ≤ 11 kHz > at PWM frequency ≤ 10 kHz > at PWM frequency ≤ 1 kHz	 20 10 5 1		 80 90 95 99	 % % % %
PWM duty cycle tolerance (input threshold level set to 50 % of signal voltage) > at PWM frequency ≤ 25 kHz > at PWM frequency ≤ 15 kHz > at PWM frequency ≤ 10 kHz > at PWM frequency ≤ 1 kHz			 15 5 5 1	 % abs % abs % abs % abs

3.6 Technical Data VT1104

3.6.1 General

Parameter	Min.	Typ.	Max.	Unit
Supply voltage (via the backplane)	10.8	12	13.2	V
Power consumption at 12.0 V, no special function like electronic load enabled > all relays off > 10 relays switched on		 7.1 17.1		 W W
Temperature range	0		+55	°C
Dimensions (length × width × depth)	300 x 173 x 36			mm
Total weight	approx. 972			g

3.6.2 Input Signals and Switches

Parameter	Min.	Typ.	Max.	Unit
Input voltage > pin a to pin b > pin a against ECU ground (AGND)	 -60 -60		 +60 +60	 V V
Impedance (pin a to pin b, pin a against ECU ground) > Low impedance mode > High impedance mode	 100 1			 kΩ MΩ
Carrying current (per channel) > Continuous current > Peak current for ≤ 10 s			 16 30	 A A
Switching current (per channel, resistive load) > at voltage, pin a to b ≤ ±60 V			 30	 A
Fuse (standard automotive type FKS 19 mm)		20		A
Contact resistance (pin a to pin b, short-circuit relay closed)		10	20	mΩ

3.6.3 Electronic Load

Parameter	Min.	Typ.	Max.	Unit
Constant current mode				
> current range	0.1		10	A
> accuracy ± (% of value + offset)	-(0.5 + 50 mA)		+(0.5 + 50 mA)	
Constant resistor mode				
> resistance range	1.5		400	Ω
> accuracy ± (at current ≥ ±0.5A)			10	%
> accuracy ± (at current ≥ ±1.0A)			5	%
> recommended current range	0.1		10	A
Input voltage (pin a to b)				
> at current 0.1 A	±3.0		±60	V
> at current 10 A	±7.5		±60	V
> input voltage low side against ECU ground (AGND)	0		28	V
> input voltage high side against ECU ground (AGND)	0		60	V
Dynamic				
> settling time to required value			30	ms
Power rating (at 23±5°C)				
> Continuous load (all channels together)		30		W
> Peak load (≤ 2 s, single channel)			120	W

3.6.4 Voltage Measurement

Parameter	Min.	Typ.	Max.	Unit
Measurement range (high and low impedance)				
> pin a to pin b	-60		+60	V
> pin a against ECU ground (AGND)	-60		+60	V
A/D converter				
> Resolution		16		Bits
> Sample rate for raw data (per channel)		250		kSamples/s

Parameter	Min.	Typ.	Max.	Unit
Without adjustment: > Accuracy at 23±5°C, ±(% of value + offset)	-(1.2+80 mV)		+(1.2+80 mV)	
With adjustment: > Accuracy at 23±5°C, ±(% of value + offset)	-(0.3+40 mV)		+(0.3+40 mV)	

The accuracy of a measured voltage depends on two parts (% of value + offset). The first part (relative value) depends on the measured value; the second part (absolute value) is a fixed offset voltage.

As an example, if you measure a voltage of -5 V, you get an accuracy of ±55 mV (0.3 % of 5V + 40 mV).

3.6.5 Digital Input

Parameter	Min.	Typ.	Max.	Unit
Threshold voltage	-32.7		+32.7	V
Threshold resolution		250		mV
Sampling interval		50		µs

3.6.6 PWM Measurement

Low Impedance Mode

Parameter	Min.	Typ.	Max.	Unit
PWM frequency	0.00002		200	kHz
PWM frequency accuracy > at PWM frequency ≤ 200 kHz > at PWM frequency ≤ 100 kHz > at PWM frequency ≤ 10 kHz > at PWM frequency ≤ 1 kHz			 2 1 0.1 0.01	 % % % %
PWM duty cycle range > at PWM frequency ≤ 200 kHz > at PWM frequency ≤ 100 kHz > at PWM frequency ≤ 10 kHz > at PWM frequency ≤ 1 kHz	 20 10 5 1		 80 90 95 99	 % % % %
PWM duty cycle tolerance (input threshold level set to 50 % of signal voltage) > at PWM frequency ≤ 200 kHz > at PWM frequency ≤ 100 kHz > at PWM frequency ≤ 10 kHz > at PWM frequency ≤ 1 kHz			 15 10 1.5 0.2	 % abs % abs % abs % abs

High Impedance Mode

Parameter	Min.	Typ.	Max.	Unit
PWM frequency	0.00002		25	kHz
PWM frequency accuracy > at PWM frequency ≤ 25 kHz > at PWM frequency ≤ 15 kHz > at PWM frequency ≤ 10 kHz > at PWM frequency ≤ 1 kHz			 0.2 0.2 0.1 0.01	 % % % %
PWM duty cycle range > at PWM frequency ≤ 25 kHz > at PWM frequency ≤ 11 kHz > at PWM frequency ≤ 10 kHz > at PWM frequency ≤ 1 kHz	 20 10 5 1		 80 90 95 99	 % % % %
PWM duty cycle tolerance (input threshold level set to 50 % of signal voltage) > at PWM frequency ≤ 25 kHz > at PWM frequency ≤ 15 kHz > at PWM frequency ≤ 10 kHz > at PWM frequency ≤ 1 kHz			 15 5 5 1	 % abs % abs % abs % abs

4 VT2004 – Stimulation Module

In this chapter you find the following information:

4.1 Purpose **62**
4.1.1 VT2004A 62
4.1.2 VT2004A FPGA 62
4.2 Installation **62**
4.3 Usage **62**
4.3.1 Basic Connection Scheme 62
4.3.2 Signal Path Switching 63
4.3.3 Using the Bus Bars 64
4.3.4 Decade Resistor 64
4.3.5 Voltage Stimulation 65
4.3.6 Potentiometer Stimulation 65
4.3.7 Displays 65
4.4 Connectors **66**
4.4.1 Potentiometer Reference Connector 66
4.4.2 ECU Connector 67
4.4.3 Original Sensor Connector 69
4.4.4 Bus Bar Connector 69
4.4.5 Front Panel Measurement Connector 70
4.5 Technical Data VT2004A **70**
4.5.1 General 70
4.5.2 Input Signals and Switches 71
4.5.3 Voltage Stimulation 72
4.5.4 Decade Resistor 72
4.5.5 PWM Generation 73

4.1 Purpose

4.1.1 VT2004A

The Stimulation Module VT2004A is connected to up to four inputs of an ECU, which are connected in real in-vehicle operation to sensors such as temperature probes or switches. The VT2004A outputs signals to the ECU to simulate sensors and thus to stimulate the ECU. It provides several features to check the ECU behavior regarding these four ECU inputs

- Sensor simulation by output of an analog signal, a PWM signal, or a resistance (decade resistor)
- Simulation of a potentiometer (channel 1 only)
- Relays to connect the ECU input to the original sensor
- Relays to generate electrical errors like short circuits between the ECU output lines and ECU ground or V_{batt}

4.1.2 VT2004A FPGA

Basically, the VT2004A FPGA has the same hardware functionality and features as the VT2004A and is therefore used like the standard VT2004A. Additionally the VT2004A FPGA provides a second, dedicated FPGA, which has access to the VT System module's hardware and CANoe. It can be used for implementing custom functionality.

More information about the FPGA variants of the VT System modules can be found in chapter 26 User Programmable FPGA.

4.2 Installation

Please follow the general installation instructions in chapter 2.1.2 Modules.

4.3 Usage

4.3.1 Basic Connection Scheme

The connectors located above the backplane on the rear of the module can be used to make the following connections:

- **Connecting the ECU**:
  The four ECU inputs (e.g. for a light or temperature sensor, a switching contact or other sensors) can be connected via two lines each. This must always be a two-wired connection, even if the ECU only has one input pin. If this is the case, the ground of the intended sensor must be applied to the other pin.
  Some typical configurations are

	VT2004 pin a	VT2004 pin b
Reference potential ground	ECU input	Ground (ECU ground!)
Reference potential V_{batt}	V_{batt}	ECU input

- **Connecting the original sensors (optional)**:
  Two-wired connectors are also provided for the original sensors. At the VT2004A Line **a** and Line **b** are switched. Breaking these lines should switch the sensor to a completely passive state. This is always the case for sensors that are connected only via these two lines. If the sensor is also connected e.g. to the ECU's supply voltage, this needs to be checked.

External sensors can also in principle be connected to the original sensor connectors. If this is done using a one-sided line break, it is necessary to check carefully that disconnection is complete.

> **Bus Bar 1**:
The ECU's supply voltage (pin a) and ground (pin b) are typically connected to bus bar 1. This makes it possible to create short circuits to ground and V_{batt}. Just like bus bar 2, bus bar 1 can also be used to for other purposes if short circuits to ground/ V_{batt} are not needed.

> **Bus Bar 2**:
Bus bar 2 is used to extend the system by adding other external devices. An additional device, such as a special sensor simulation or a measurement device, can be connected to bus bar 2. Lines a and b of all included VT2004A modules are typically interconnected (bus wiring) and then connected to the external device. We recommend doing so. If needed, of course, it is possible to form groups or to connect devices only to a bus bar on one single module.

Bus bars can also be used to create short circuits between the lines of different ECU channels. In this case the bus connections **a** and **b** of all modules (including other VT modules such as the VT1004A Load and Measurement module) are once again interconnected. A further external device cannot be connected in this case.

The cabling is done using Phoenix connectors, making it easy to switch them around. The test system can therefore be easily used for different ECUs, simply by connecting a different ECU cable (connecting the VT module to the ECU to be tested).

4.3.2 Signal Path Switching

The figure below shows the various signal paths and switching options for one channel on the VT2004A. There are four such independent channels.

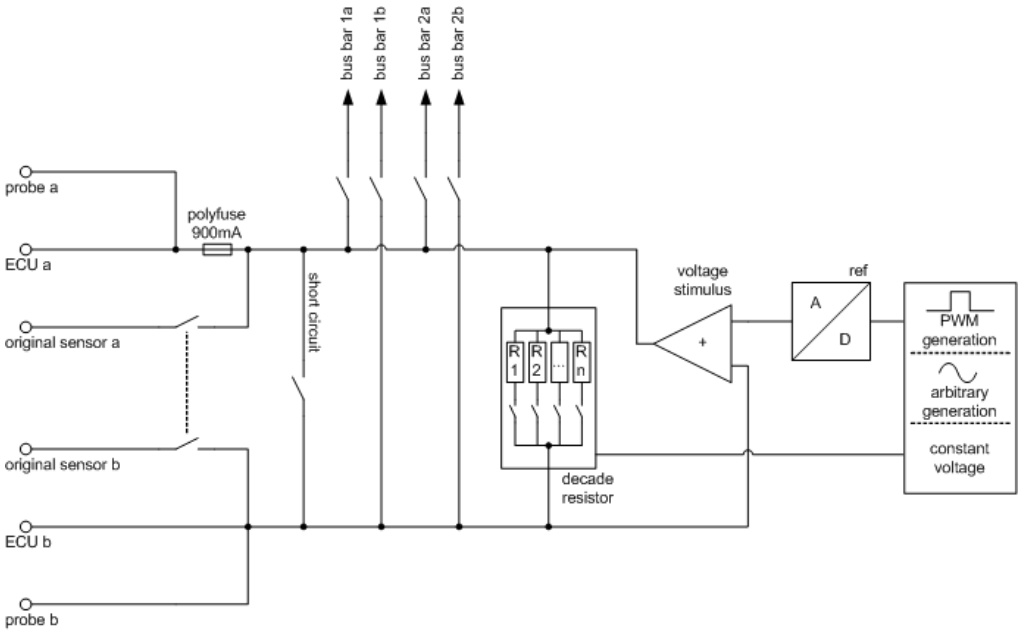

Figure **10:** Signal paths and switching options

The connection to the ECU is protected by a 0.9 A fuse (self-resetting) in line a. The relays and connections on the module can be used with a current of up to 900 mA. Lower threshold values apply for the voltage stimulus and decade resistor.

4.3.3 Using the Bus Bars

The VT2004A has two independent internal bus bars:

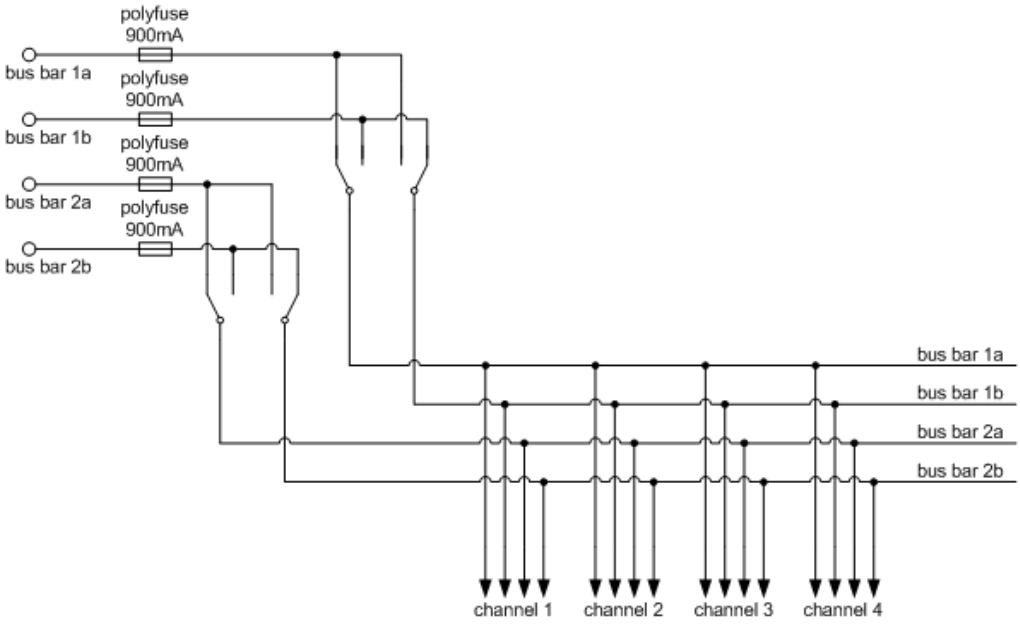

Figure **11:** Internal bus bars

Typically, bus bar 1 is connected to ECU V_{batt} and ECU ground. This makes it possible to generate short-circuits of channel lines to V_{batt} and ground. But bus bar 1 may also be used for other purposes.

At the VT2004A the two relays of each bus bar to switch the polarity of the bus bar (bus bar switch relays) can be switched independently. This makes it possible, for instance, to apply the signal at bus bar connection **b** to both internal bus bar lines (relay **a** is switched → **ab**). For example, channel lines **a** and **b** can both be shorted to ground in this way.

The maximum permissible load for the bus signal paths and relays corresponds to the values given for the channel switching options.

NOTICE!

Using the bus bars several connections from one connector to another connector of the module are possible without any fuse in the signal path. Carefully avoid short-circuits or any kind of overload using these signal paths. This may damage the relays of the module or the module itself.

4.3.4 Decade Resistor

Decade resistors Each channel contains a decade resistor that can be used to simulate sensors whose resistance value or current flow change depending on the measurement parameter used. The decade resistor on channel 4 accommodates a larger value range.

Because the decade's resistors are switched via a PhotoMOS relay, the decade resistor is potential-free and not polarity dependent.

The decade resistor is limited electronically. The decade resistor therefore switches off when the permissible wattage is exceeded. This will happen if a low resistance is selected and the voltage applied is too high.

The decade resistor can be operated in two modes:

- **R>**:
  While switching between a resistance value R1 and a value R2, interim values must fall within or above the value range of R1/R2, i.e., values must be greater R1 and R2.
- **R<**:
  While switching, interim values must fall within the range of R1/R2 or below this range, i.e., values must be less than R1 and R2.

Value ranges and tolerances for the decade resistor are included in the technical data (see chapter 4.5 Technical Data VT2004A).

4.3.5 Voltage Stimulation

Each of the VT2004 channels provides a unit for generating voltage signals which can be used to simulate sensors that output their measurement values as voltage values.

The specified voltage is delivered as voltage to line **a** and applied to line **b**. Line **b** does not need to have ground potential in this case. The voltage output at line **b** must always be balanced against the ECU ground within a range of 0 V and the maximum output voltage. Independent from the potential connected to pin **b**, the maximum output voltage cannot exceed the output range.



NOTICE!

The output voltage on line **a** always refers to the potential of line **b**. Therefore, line **b** must always be set to a fixed reference potential, e.g. ECU ground if voltage output is used. Thus, outputting voltage, even if it is only for testing, only works if a potential, e.g. ECU ground, is connected to line **b**.

4.3.6 Potentiometer Stimulation

The potentiometer stimulation is a special form of voltage stimulus. In this case, as with a potentiometer, the output voltage is affected both by the potentiometer setting and by the reference voltage that is applied.

The reference voltage is fed in via a separate connector. The internal resistance of a potentiometer is not simulated in this case.

This feature is implemented only on channel **1**.

4.3.7 Displays

LEDs

The current state of the relay switching for all four channels is indicated by LEDs on the front panel.

LED	Description
Original Load	...lights up when the ECU lines are switched to the original sensor inputs.
Short Circuit	...lights up when the short circuit relay is switched.

LED	Description
R_{int}	...lights up when the internal decade resistor is activated.
U_{int}	...lights up when the internal voltage stimulus is activated.
Bus Bar	...the left LED lights up when at least one line is switched to bus bar 1; the right LED lights up for bus bar 2.

The four LEDs in the lower part of the front panel indicate the state of the bus bar relays; the two left-hand LEDs are for bus bar 1 and the two right-hand LEDs for bus bar 2.

LED	Description
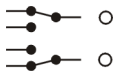	The bus bar lines are routed to the module in an unmodified state.
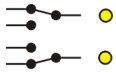	The bus bar lines are swapped. Bus bar connection pin **a** is applied to internal bus bar line **b**; pin **b** to internal bus bar line **a**.

Error Messages

The following errors can be indicated:

> **R_{int}** blinks when an overload of the resistor decade is detected.
This state is exited only after measurement in CANoe has been switched off and on again.

4.4 Connectors

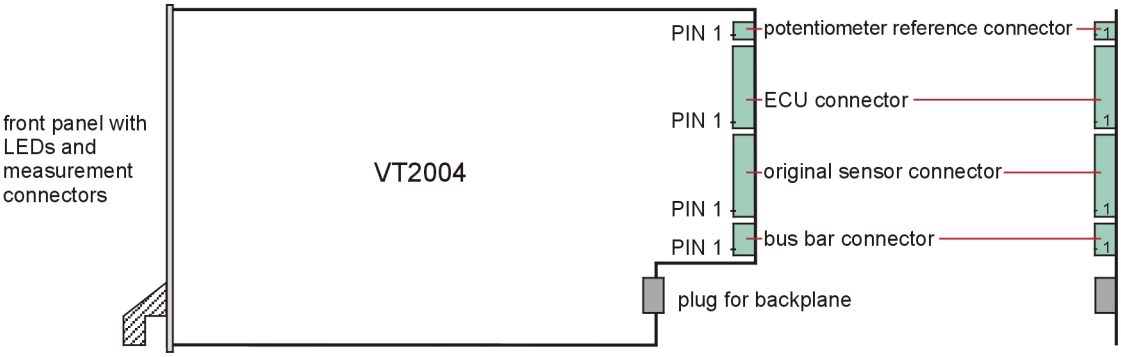

Figure **12:** Connectors

4.4.1 Potentiometer Reference Connector

Plug type: Phoenix Contact MC 1,5/2-ST-3,81

Plug allocation (from top to bottom, viewed from the rear after installation):

Pin	Description
2	Potentiometer reference for channel 1, pin a
1	Potentiometer reference for channel 1, pin b (same as channel 1, ECU connector, pin b)

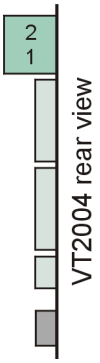

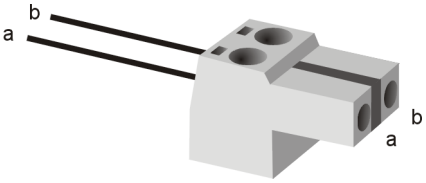

Figure **13:** Potentiometer reference connector

4.4.2 ECU Connector

Plug type: Phoenix Contact MC 1,5/8-ST-3,81

Plug allocation (from top to bottom, viewed from the rear after installation):

Pin	Description
8	channel 1, ECU pin a
7	channel 1, ECU pin b
6	channel 2, ECU pin a
5	channel 2, ECU pin b
4	channel 3, ECU pin a
3	channel 3, ECU pin b
2	channel 4, ECU pin a
1	channel 4, ECU pin b

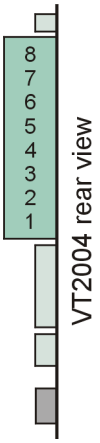

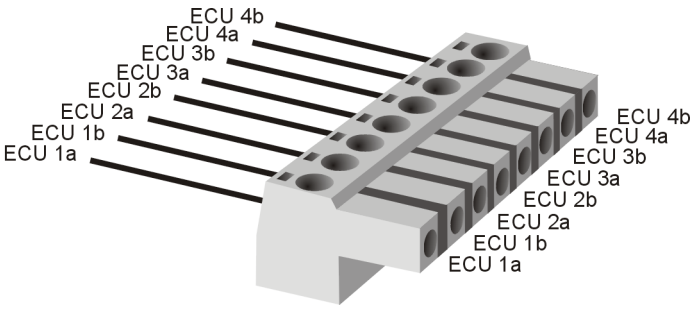

Figure **14:** ECU connector

4.4.3 Original Sensor Connector

Plug type: Phoenix Contact MC 1,5/8-ST-3,81

Plug allocation (from top to bottom, viewed from the rear after installation):

Pin	Description
8	channel 1, original sensor, pin a
7	channel 1, original sensor, pin b
6	channel 2, original sensor, pin a
5	channel 2, original sensor, pin b
4	channel 3, original sensor, pin a
3	channel 3, original sensor, pin b
2	channel 4, original sensor, pin a
1	channel 4, original sensor, pin b



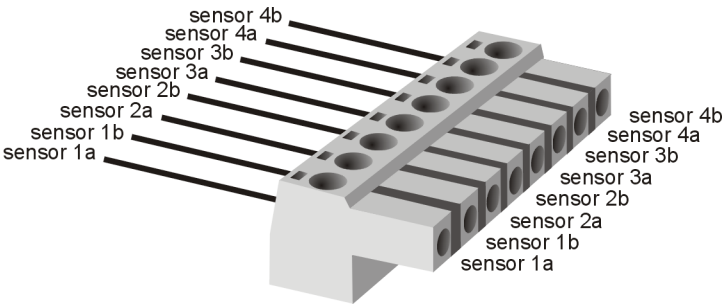

Figure **15:** Original sensor connector

4.4.4 Bus Bar Connector

Plug type: Phoenix Contact MC 1,5/ 4-ST-3,81

Plug allocation (from top to bottom, viewed from the rear after installation):

Pin	Description
4	Bus bar 1, pin a
3	Bus bar 1, pin b
2	Bus bar 2, pin a
1	Bus bar 2, pin b



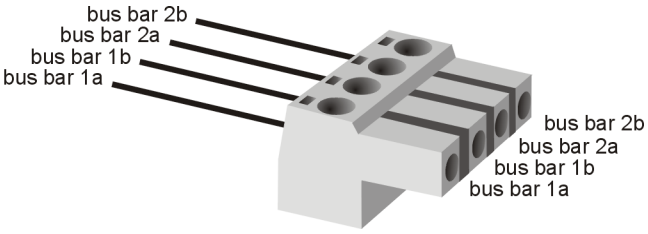

Figure **16:** Bus bar connector

4.4.5 Front Panel Measurement Connector

There are two measurement connectors (2 mm) on the front panel for each of the four channels on the circuit board (view on front panel after installation):

Pin	Connector	Description
1	Upper connector	ECU measurement output pin a
2	Lower connector	ECU measurement output pin b

4.5 Technical Data VT2004A

4.5.1 General

Parameter	Min.	Typ.	Max.	Unit
Supply voltage (via the backplane)	10.8	12	13.2	V
Power consumption at 12.0 V, no special function like electronic load enabled > all relays off > 10 relays switched on		 3.5 5		 W W
Temperature range	0		+55	°C

Parameter	Min.	Typ.	Max.	Unit
Dimensions (length × width × depth)	300 x 173 x 36			mm
Total weight	approx. 400			g

4.5.2 Input Signals and Switches

Parameter	Min.	Typ.	Max.	Unit
Input voltage				
> pin a to pin b	-40		+40	V
> pin a against ECU ground (AGND)	-40		+40	V
Input current			0.8	A
Contact resistance (pin a to pin b, short-circuit relay closed)		0.4	1	mΩ

4.5.3 Voltage Stimulation

Parameter	Min.	Typ.	Max.	Unit
Output voltage range	0		40	V
Output current			150	mA
D/A converter > Resolution > Settling time (from zero scale to full scale)		 14 0.5		 Bits µs
Without load: Accuracy at 23±5°C, ±(% of value + offset)	 -(0.05+15 mV)		 +(0.05+15 mV)	
Slew Rate (resistive load, 20mA)		20		V/µs
Potentiometer input voltage	0		40	V
Potentiometer input resistance		4		kΩ

4.5.4 Decade Resistor

Channel 1-3

Parameter	Min.	Typ.	Max.	Unit
Resistance range ...extended range with higher tolerance	0.01 0.01		10 150	kΩ kΩ
Resistance tolerance at 23±5°C, ±(% of value + offset) > range 10 Ω...100 Ω > range 100 Ω...25 kΩ > range 25 kΩ...150 kΩ	 -(1.0+2 Ω) -(2.0+2 Ω) -(10.0+2 Ω)		 +(1.0+2 Ω) +(2.0+2 Ω) +(10.0+2 Ω)	
Switching time		250	500	µs
Voltage range	-40		+40	V
Current carrying capacity	-200		+200	mA
Power rating			3.5	W

Channel 4

Parameter	Min.	Typ.	Max.	Unit
Resistance range	0.001		250	kΩ
Resistance tolerance at 23±5°C, ±(% of value + offset) > range 1 Ω...100 Ω > range 100 Ω...250 kΩ	 -(1.0+2 Ω) -(2.0+2 Ω)		 +(1.0+2 Ω) +(2.0+2 Ω)	
Switching time		250	500	µs
Voltage range	-40		+40	V
Current carrying capacity	-200		+200	mA
Power rating			3.5	W



Note

By calibrating the individual resistance of 2 ohms, 13 ohms, 53 ohms, ... 3495445 ohms and ensuring that the tolerance is within (1% + 2 Ω), it can be ensured that the user configured resistance is within the tolerance range.

4.5.5 PWM Generation

Parameter	Min.	Typ.	Max.	Unit
PWM frequency	0.0001		200	kHz
PWM frequency accuracy > at PWM frequency ≤ 25 kHz > at PWM frequency ≤ 10 kHz > at PWM frequency ≤ 1 kHz			 0.5 0.1 0.01	 % % %
PWM duty cycle range > at PWM frequency ≤ 25 kHz > at PWM frequency ≤ 10 kHz > at PWM frequency ≤ 1 kHz	 10 5 1		 90 95 99	 % % %
PWM duty cycle tolerance > at PWM frequency ≤ 25 kHz > at PWM frequency ≤ 10 kHz > at PWM frequency ≤ 1 kHz			 0.5 0.2 0.1	 % abs. % abs. % abs.

5 VT2516A – Digital Module

In this chapter you find the following information:

5.1 Purpose **75**
5.1.1 VT2516A 75
5.1.2 VT2516A FPGA 75
5.2 Installation **75**
5.3 Usage **75**
5.3.1 Basic Connection Scheme 75
5.3.2 Signal Path Switching 76
5.3.3 Using the Bus Bars 77
5.3.4 Measuring the Digital Input Signal 77
5.3.5 Voltage Measurement 77
5.3.6 Outputting a Digital Signal 78
5.3.7 Load or Pull-up/down Resistor 78
5.3.8 Displays 78
5.4 Connectors **78**
5.4.1 ECU Connector 79
5.4.2 Original Load/Sensor Connector 81
5.4.3 Load Resistor Connectors 83
5.4.4 Bus Bar Connector 83
5.5 Technical Data VT2516A **84**
5.5.1 General 84
5.5.2 Input Signals and Switches 84
5.5.3 Digital Input 85
5.5.4 PWM Measurement 85
5.5.5 Voltage Measurement 85
5.5.6 Digital Output 86
5.5.7 PWM Generation 86

5.1 Purpose

5.1.1 VT2516A

The Digital Module VT2516A is connected to up to 16 mainly digitally used inputs and outputs of an ECU. Mainly digitally used means that the signals have two states. In real in-vehicle operation actuators like signal lamps or sensors like switches are connected to these ECU I/Os. The VT2516A provides several features to check the ECU behavior regarding these ECU inputs/outputs:

- **For ECU output:**
  - Measurement of the digital ECU output signal (incl. PWM) and the ECU output voltage
  - Simulation of the actuator load by an externally mounted load (e.g. a resistor)
- **For ECU input**:
  - Sensor simulation by output of a digital or PWM signal with defined high/low level
  - Sensor simulation by switching the ECU line to ECU ground or V_{batt}
- Relays to connect the ECU input or output to the original sensor or actuator
- Relays to generate electrical errors like disconnection of ECU lines ("open load, broken wire")

5.1.2 VT2516A FPGA

Basically, the VT2516A FPGA has the same hardware functionality and features as the VT2516A and is therefore used like the standard VT2516A. Additionally the VT2516A FPGA provides a second, dedicated FPGA, which has access to the VT System module's hardware and CANoe. It can be used for implementing custom functionality.

More information about the FPGA variants of the VT System modules can be found in chapter 26 User Programmable FPGA.

5.2 Installation

Please follow the general installation instructions in chapter 2.1.2 Modules.



Cross Reference

More information about the settings in CANoe can be found in the CANoe help.

5.3 Usage

5.3.1 Basic Connection Scheme

The connectors located above the backplane on the rear of the module can be used to make the following connections:

- **Connecting the ECU**:
  16 ECU inputs or outputs can be connected via one line each.
- **Connecting the original sensors or actuators (optional)**:
  The sensors or actuators originally connected to the ECU can be now connected to the VT2516A, also with one line each.
- **V_{batt}/ECU ground**:
  The ECU's supply voltage (V_{batt}) can be connected to the module to create short circuits to V_{batt}. The connection of the ECU ground is mandatory, because the ECU ground is not only needed to create short circuits to ground, but also as reference potential for the measurement and

stimulation.
This makes it possible to create short circuits to V_{batt} and ground. But it is also needed for output (as the reference potential) and measurement. Therefore, always connect both lines, even if you do not plan to use the short circuit feature.

> **Bus Bar**:
The bus bar is used to extend the system by adding other external devices. An additional device, such as a special simulation or measurement device, can be connected to the bus bar lines.
The bus bar has two wires like all bus bars in a VT System rack, although there is only one pin to the ECU per channel. The second pin of the bus bar can be switched to V_{batt} or ground. This is the reference potential of the ECU signal.

Lines **a** and **b** of all included stimulation and measurement modules are typically interconnected (bus wiring) and then connected to the external device. We recommend doing so. If needed, of course, it is possible to form groups or to connect devices only to a bus on one single module.

Bus bars can also be used to create short circuits between the lines of different ECU channels. In this case the bus bar connections **a** and **b** of all modules are interconnected. A further external device cannot be connected in this case.

> **External Load or Pull-up/down resistors (optional)**:
Each channel can be equipped with one load, pull-up, or pull-down resistor. The resistors are mounted on the connectors in groups of 4 resistors. E.g. there are four connectors with 4 resistors for 4 channels each. Each connector provides ground and V_{batt}. Thus, the other end of the resistors can be connected to ground or V_{batt} directly at the connector.

The cabling is done using Phoenix connectors, making it easy to switch them around. The test system can therefore be easily used for different ECUs, simply by connecting a different ECU cable (connecting the VT module to the ECU to be tested).

5.3.2 Signal Path Switching

The figure below shows the various signal paths and switching options for one channel on the VT2516A. There are sixteen such independent channels.

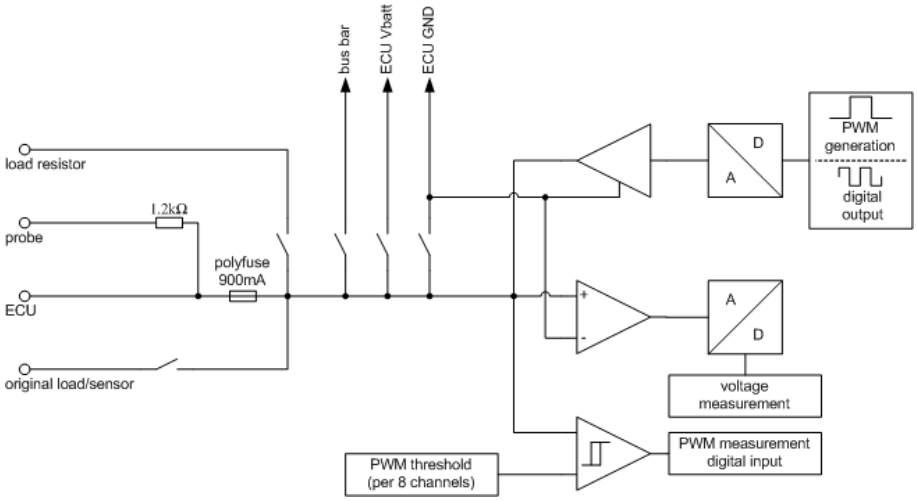

Figure **17:** Signal paths and switching options

5.3.3 Using the Bus Bars

The VT2516A has one internal bus bar for arbitrary use. Additionally, ECU ground must be connected and V_{batt} can be connected to the module:

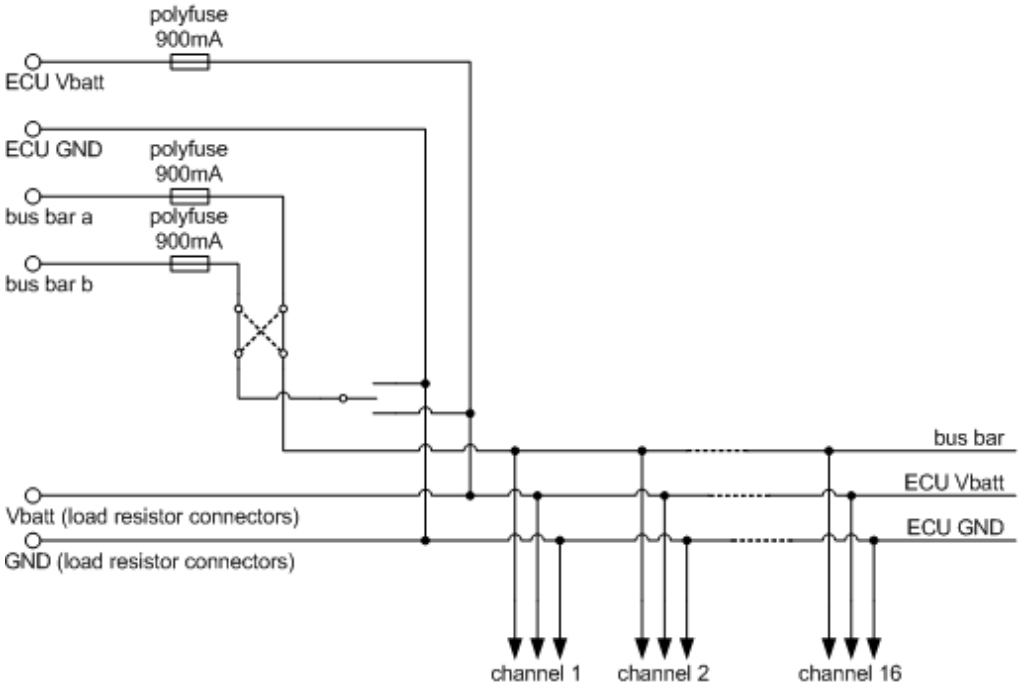

Figure **18:** Internal bus bars

The internal bus bar consists of one wire because the channels of the VT2516A are single ended. The connector to the internal bus bar has two pins. The second pin is internally switched to ECU ground or V_{batt}. This is the reference potential for the signal on the internal bus bar line.

5.3.4 Measuring the Digital Input Signal

The digital data stream of each channel's signal line is captured. This happens regardless of whether the channel is used as in input or an output. An adjustable switching threshold is used to differentiate between the High and Low states. This switching threshold is set for groups of channels, i.e. for channels 1...8 and 9...16 collectively.

The signal is sampled every 50 µs. The bit stream is made available to CANoe.

The module can also measure PWM signals. The frequency and duty cycle of the signal is determined and made available in CANoe.

5.3.5 Voltage Measurement

The VT2516A measures and pre-processes the voltage level of each channel's signal line, and makes it available to CANoe, regardless of whether the channel is used as in input or an output.

The voltage is measured using an A/D converter. These measured values yield instantaneous values, from which averages for various integration intervals are derived.

5.3.6 Outputting a Digital Signal

The VT2516A can output a digital voltage signal on each channel. The ECU interprets this as a sensor signal. High and Low levels can be set separately for each channel.

There are several output modes available, especially output of a digital value by CANoe, a PWM signal generated by the VT2516A module, and a bit stream downloaded to the module and autonomously output by the module.

5.3.7 Load or Pull-up/down Resistor

A resistor referenced to Vbatt or ground can be connected to each channel. The externally mounted resistor should be fixed to one of the reference potentials (V_{batt} or ground) available on the connector. Typically the resistor is mounted directly at the connector. The resistor can be used for a variety of purposes:

- To simulate a load, e.g. a control LED that would normally be connected to the ECU on this channel.
- As an external pull-up resistor, if one is expected by the ECU. This could be the case, for example, when you want to connect a switch referenced to ground to the ECU.
- As an external pull-down resistor, if one is expected by the ECU. This could be the case, for example, when you want to connect a switch referenced to V_{batt} to the ECU.

5.3.8 Displays

The current state of the ECU pin of each channel is indicated by LEDs on the front panel.

LED	Description
LED of channel	...lights up when the voltage on the ECU lines is higher than the defined threshold.

5.4 Connectors

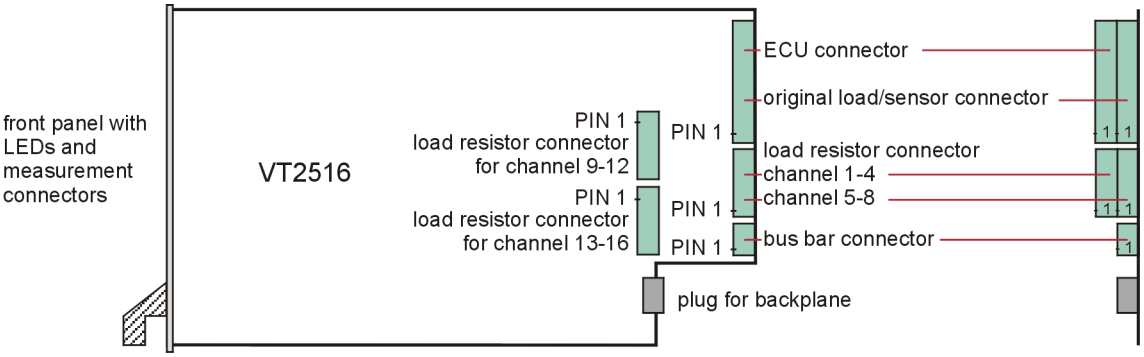

Figure **19:** Connectors

5.4.1 ECU Connector

Plug type: Phoenix Contact MC 1,5/16-ST-3,81

Plug allocation (from top to bottom, viewed from the rear after installation):

Pin	Description
16	channel 1, ECU pin
15	channel 2, ECU pin
14	channel 3, ECU pin
13	channel 4, ECU pin
12	channel 5, ECU pin
11	channel 6, ECU pin
10	channel 7, ECU pin
9	channel 8, ECU pin
8	channel 9, ECU pin
7	channel 10, ECU pin
6	channel 11, ECU pin
5	channel 12, ECU pin
4	channel 13, ECU pin
3	channel 14, ECU pin
2	channel 15, ECU pin
1	channel 16, ECU pin b



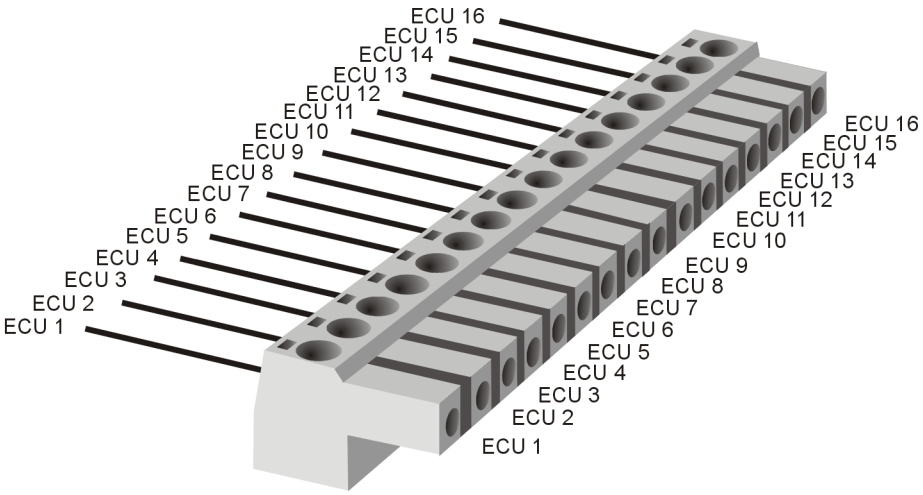

Figure **20:** ECU connector

5.4.2 Original Load/Sensor Connector

Plug type: Phoenix Contact MC 1,5/16-ST-3,81

Plug allocation (from top to bottom, viewed from the rear after installation):

Pin	Description
16	channel 1, original load or sensor
15	channel 2, original load or sensor
14	channel 3, original load or sensor
13	channel 4, original load or sensor
12	channel 5, original load or sensor
11	channel 6, original load or sensor
10	channel 7, original load or sensor
9	channel 8, original load or sensor
8	channel 9, original load or sensor
7	channel 10, original load or sensor
6	channel 11, original load or sensor
5	channel 12, original load or sensor
4	channel 13, original load or sensor
3	channel 14, original load or sensor
2	channel 15, original load or sensor
1	channel 16, original load or sensor



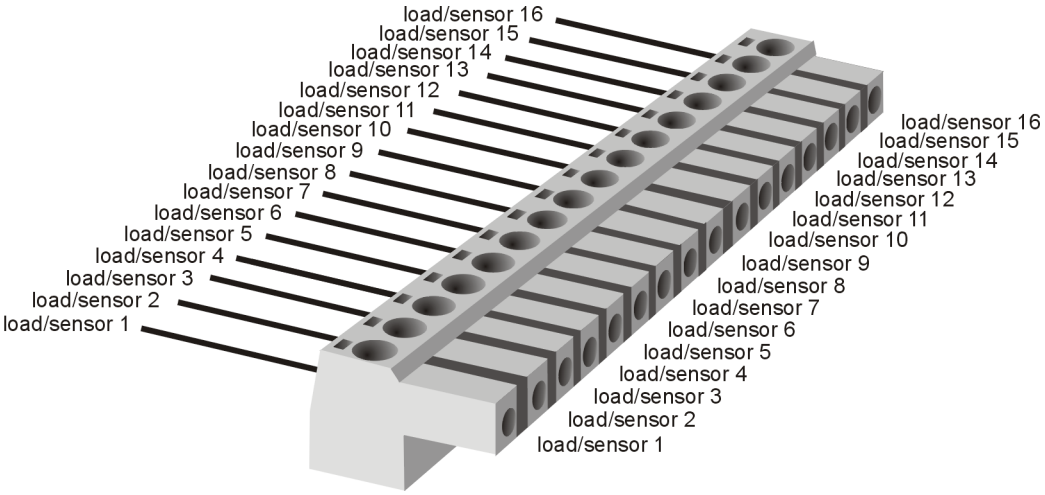

Figure **21:** Original load/sensor connector

5.4.3 Load Resistor Connectors

Plug type: Phoenix Contact MC 1,5/6-ST-3,81

Plug allocation (from top to bottom, viewed from the rear after installation):

Pin	Description
6	V_{batt}
5	channel 1 (resp. 5, 9, 13), load resistor
4	channel 2 (resp. 6, 10, 14), load resistor
3	channel 3 (resp. 7, 11, 15), load resistor
2	channel 4 (resp. 8, 12, 16), load resistor
1	Ground

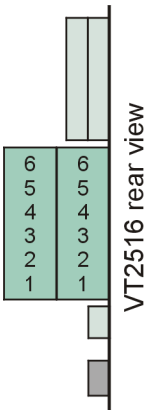

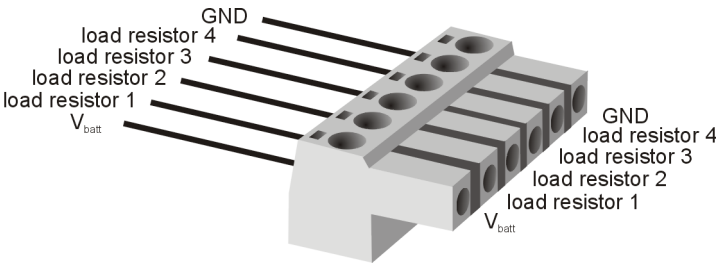

Figure **22:** Load resistor connector

5.4.4 Bus Bar Connector

Plug type: Phoenix Contact MC 1,5/4-ST-3,81

Plug allocation (from top to bottom, viewed from the rear after installation):

Pin	Description
4	ECU $_{Vbatt}$
3	ECU ground
2	Bus bar, pin a
1	Bus bar, pin b

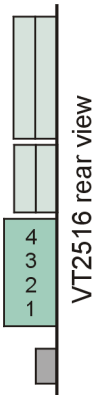

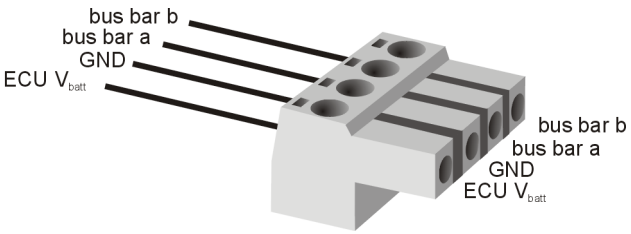

Figure **23:** Bus bar connector

5.5 Technical Data VT2516A

5.5.1 General

Parameter	Min.	Typ.	Max.	Unit
Supply voltage (via the backplane)	10.8	12	13.2	V
Power consumption at 12.0 V, no special function like electronic load enabled > all relays off > 32 relays switched on		 8 13		 W W
Temperature range	0		+55	°C
Dimensions (length × width × depth)	300 x 173 x 36			mm
Total weight	approx. 400			g

5.5.2 Input Signals and Switches

Parameter	Min.	Typ.	Max.	Unit
Input voltage > ECU pin against ECU ground (AGND)	 -40		 +40	 V
Impedance (measurement) > ECU pin against ground (AGND)	 100			 kΩ
Input current			0.8	A
Resistance > ECU pin to V_{batt} via short circuit relay > ECU pin to ground via short circuit relay		 0.9 0.6	1	 Ω Ω

5.5.3 Digital Input

Parameter	Min.	Typ.	Max.	Unit
Threshold voltage	0		25	V
Threshold resolution		100		mV
Threshold hysteresis		1		V
Sampling interval		50		µs

5.5.4 PWM Measurement

Parameter	Min.	Typ.	Max.	Unit
PWM frequency	0.00002		200	kHz
PWM frequency accuracy > at PWM frequency ≤ 200 kHz > at PWM frequency ≤ 100 kHz > at PWM frequency ≤ 10 kHz > at PWM frequency ≤ 1 kHz			 2 1 0.1 0.01	 % % % %
PWM duty cycle range > at PWM frequency ≤ 100 kHz > at PWM frequency ≤ 10 kHz > at PWM frequency ≤ 1 kHz	 10 5 1		 90 95 99	 % % %
PWM duty cycle tolerance (Input threshold level set to 50% of signal voltage) > at PWM frequency ≤ 100 kHz > at PWM frequency ≤ 10 kHz > at PWM frequency ≤ 1 kHz			 5 0.5 0.2	 % abs. % abs. % abs.

5.5.5 Voltage Measurement

Parameter	Min.	Typ.	Max.	Unit
Measurement range > pin a against ECU ground (AGND)	 -40		 +40	 V

Parameter	Min.	Typ.	Max.	Unit
A/D converter > Resolution > Sample rate for raw data (per channel)		 12 1		 Bits kSamples/s
Accuracy at 23±5°C, ±(% of reading + offset)	-(0.5+150 mV)		+(0.5+150 mV)	

The accuracy of a measured voltage depends on two parts (% of value + offset). The first part (relative value) depends on the measured value; the second part (absolute value) is a fixed offset voltage.

As an example, if you measure a voltage of -5 V, you get an accuracy of ±175 mV (0.5 % of 5 V + 150 mV).

5.5.6 Digital Output

Parameter	Min.	Typ.	Max.	Unit
Output voltage (high level and low level)	0		25	V
Output current			30	mA
Without adjustment: Accuracy at 23±5°C, ±(% of value + offset)	 -(1.5+200 mV)		 +(1.5+200 mV)	
With adjustment: Accuracy at 23±5°C, ±(% of value + offset)	 -(0.5+200 mV)		 +(0.5+200 mV)	
D/A converter Resolution		8		Bits
Slew rate (resistive load, 10 mA)		20		V/µs
Length of bit stream	2		4096	Bit
Interval between two output values	2		65000	µs

5.5.7 PWM Generation

Parameter	Min.	Typ.	Max.	Unit
PWM frequency	0.00002		25	kHz

Parameter	Min.	Typ.	Max.	Unit
PWM frequency accuracy				
> at PWM frequency ≤ 25 kHz			0.5	%
> at PWM frequency ≤ 10 kHz			0.1	%
> at PWM frequency ≤ 1 kHz			0.01	%
PWM duty cycle range				
> at PWM frequency ≤ 25 kHz	10		90	%
> at PWM frequency ≤ 10 kHz	5		95	%
> at PWM frequency ≤ 1 kHz	1		99	%
PWM duty cycle tolerance				
> at PWM frequency ≤ 25 kHz			0.5	% abs.
> at PWM frequency ≤ 10 kHz			0.2	% abs.
> at PWM frequency ≤ 1 kHz			0.1	% abs.

6 VT2710 – Serial Interface Module

In this chapter you find the following information:

6.1 Purpose **90**
6.2 Installation **90**
6.3 Usage **91**
6.3.1 Basic Connection Scheme 91
6.3.2 Signal Path and Switching Options Digital Interfaces 93
6.3.3 Using the Bus Bars 98
6.3.4 Using the Digital Interfaces 98
6.3.5 Digital I/O 99
6.3.6 SPI 99
6.3.7 UART/RS232 99
6.3.8 RS485/RS422 99
6.3.9 I2C 100
6.3.10 LVDS 100
6.3.11 Displays 100
6.4 PSI5SENTpiggyA **102**
6.4.1 Signal Path Switching 102
6.4.2 PSI5 107
6.4.3 SENT 107
6.5 Connectors **108**
6.5.1 Digital Interface Connector 1 108
6.5.2 Digital Interface Connector 2 110
6.5.3 PSI5SENTpiggyA Connector 1 111
6.5.4 PSI5SENTpiggyA Connector 2 112
6.5.5 Bus Bar Connector 1 113
6.5.6 Bus Bar Connector 2 113
6.5.7 LVDS Connector 1 114
6.5.8 LVDS Connector 2 114
6.5.9 Front Panel Measurement Connector 116
6.6 Technical Data VT2710 ..... **116**
6.6.1 General 116
6.6.2 PSI5 Interface 117
6.6.3 SENT Interface 117
6.6.4 Digital Voltage 118

6.6.5 SPI Interface 119
6.6.6 UART Interface 120
6.6.7 RS232 Interface 120
6.6.8 RS485/RS422 Interface 122
6.6.9 I2C Interface 122
6.6.10 LVDS Interface 122

6.1 Purpose

The Serial Interface Module VT2710 provides a set of interfaces which are required for testing serial communication channels of ECUs or sensors. The module can be used either to simulate the sensor or the ECU behavior on a serial bus channel. Furthermore, the serial bus communication can be monitored. The VT2710 can also be used to control peripheral devices in a test bed.

There are two groups of serial interfaces: Automotive sensor interfaces and general-purpose digital interfaces.

The general-purpose digital interfaces SPI, UART, RS232, RS485, RS422, I2C and LVDS are located directly on the main board of the VT2710.

Like the User FPGA variants of the VT System modules, the VT2710 is by default equipped with a second, dedicated FPGA, which has access to the VT System module's hardware and CANoe.

More information about the FPGA variants of the VT System modules can be found in chapter 26 User Programmable FPGA.

6.2 Installation

Please follow the general installation instructions in chapter 2.1.2 Modules.

Additionally, connect ECU ground and V_{batt} to the module.



NOTICE!

Always connect ECU ground, even for tests of the VT System without a real ECU.

6.3 Usage

6.3.1 Basic Connection Scheme

The connectors located above the backplane on the rear of the module can be used to make the following connections:

PSI5	> **Connecting the ECU**: The PSI5 sensor interface of an ECU can be connected to the lines ECU+ and ECU-. > **Connecting Sensors**: One or more PSI5 sensors can be connected to the lines Sensor+ and Sensor-. Via these lines the sensors are supplied with power and the communication with the ECU takes part as well.
SENT	> **Connecting the ECU**: The SENT sensor interface of an ECU can be connected to the lines ECU+, ECU- and SENT VDD. The PSI5SENTpiggyA is powered by the VT2710 main board and has not to be supplied with SENT VDD. Nevertheless, the SENT VDD line has to be connected, since a certain voltage level on the SENT VDD line is the trigger for the sensor simulation to start the communication. > **Connecting Sensors**: A SENT sensor can be connected to the lines Sensor+, Sensor- and SENT VDD. The sensor is supplied via the line SENT VDD.
SPI	> **MOSI**: The MOSI line (master output, slave input) of an SPI master or SPI slaves can be connected to this line. > **MISO**: The MISO line (master input, slave output) of an SPI master or SPI slaves can be connected to this line. > **SCLK**: The serial clock line of an SPI master or SPI slaves can be connected to this line. > **CS1 ... CS5**: When simulating a SPI master with the VT2710, up to five chip select lines of SPI slaves can be connected to these lines. For SPI slave simulation, these lines can be connected to an SPI master when simulating several SPI slaves with only one SPI interface of the VT2710.

UART/RS232	> **Tx**: The receive line of a UART/RS232 interface from an ECU or another device can be connected to the transmit line of the interface on the VT2710. > **Rx**: The transmit line of a UART/RS232 interface from an ECU or another device can be connected to the receive line of the interface on the VT2710.
RS485/RS422	> **RxTx+**: The positive line of a differential RS485/RS422 bus can be connected here. > **RxTx-**: The negative line of a differential RS485/RS422 bus can be connected here.
I2C	> **SDA**: The serial data line of a I2C bus can be connected here. > **SCL**: The serial clock line of a I2C bus can be connected here.
LVDS	A standard ethernet cable can be connected to the RJ45 connector in order to establish an LVDS connection. **Note** The LVDS interface only uses an RJ45 socket as physical connector. But with this interface no Ethernet connection or connection of ADAS sensors are possible.
Bus bars	> **Bus Bar 1**: The ECU's supply voltage (pin a) and ground (pin b) are typically connected to bus bar 1. This makes it possible to create short circuits to ground and V_{batt} . Just like bus bar 2, bus bar 1 can also be used for other purposes if short circuits to ground/ V_{batt} are not required. > **Bus Bar 2**: Bus bar 2 can be used to create short circuits between the lines of different PSI5SENTpiggies on the VT2710. Short circuits to other ECU I/O lines are possible as well. In this case the bus connections a and b of all modules (also including other VT modules than the VT2710) are interconnected.

The cabling is done using Phoenix connectors, making it easy to switch them around. The test system can therefore be easily used for different ECUs, simply by connecting a different ECU cable (connecting the VT module to the ECU to be tested).

6.3.2 Signal Path and Switching Options Digital Interfaces

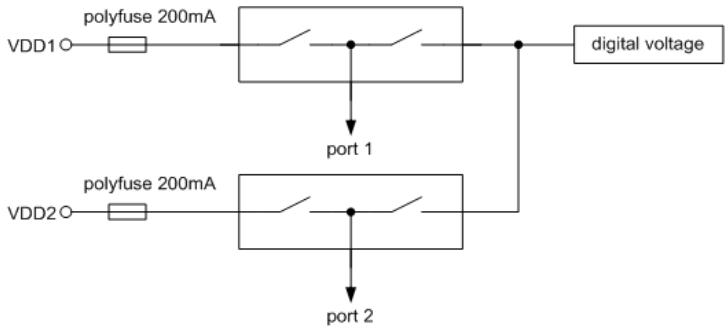

Figure **24:** Digital voltage

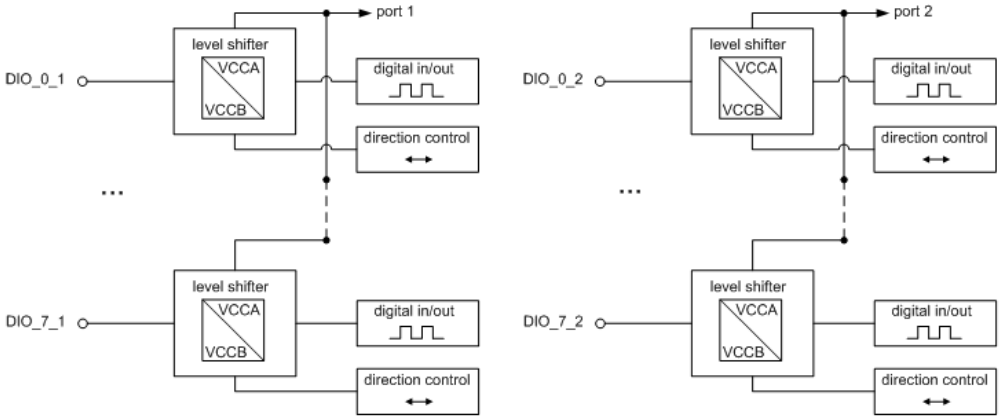

Figure **25:** Digital I/O

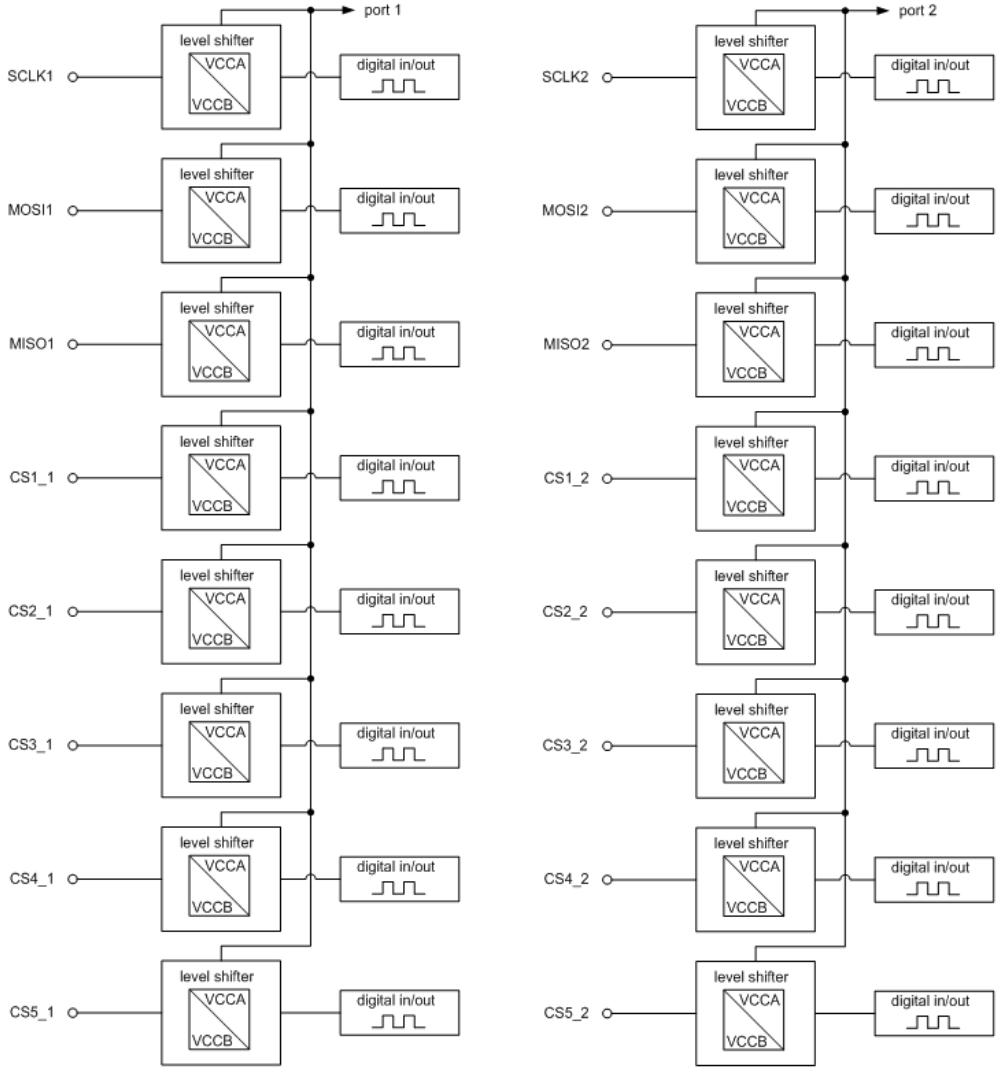

Figure **26:** SPI

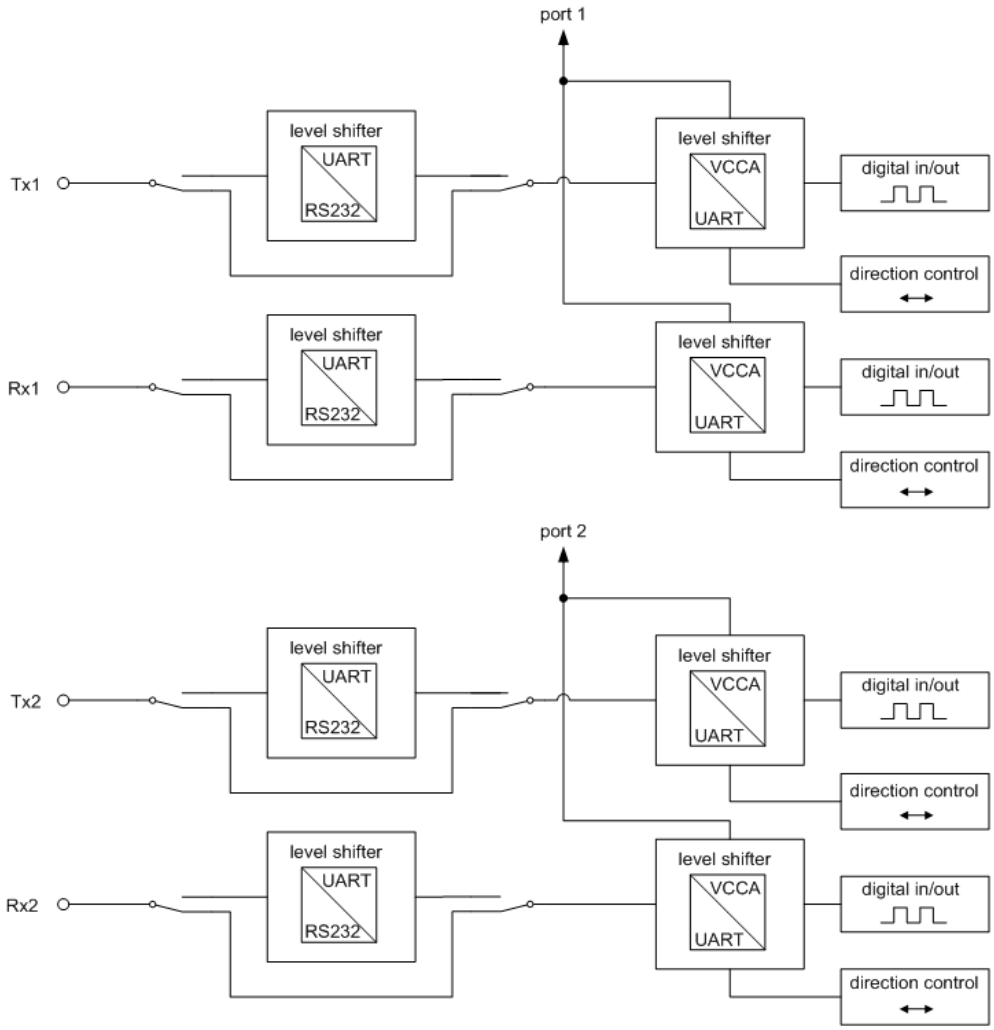

Figure **27:** UART/RS232

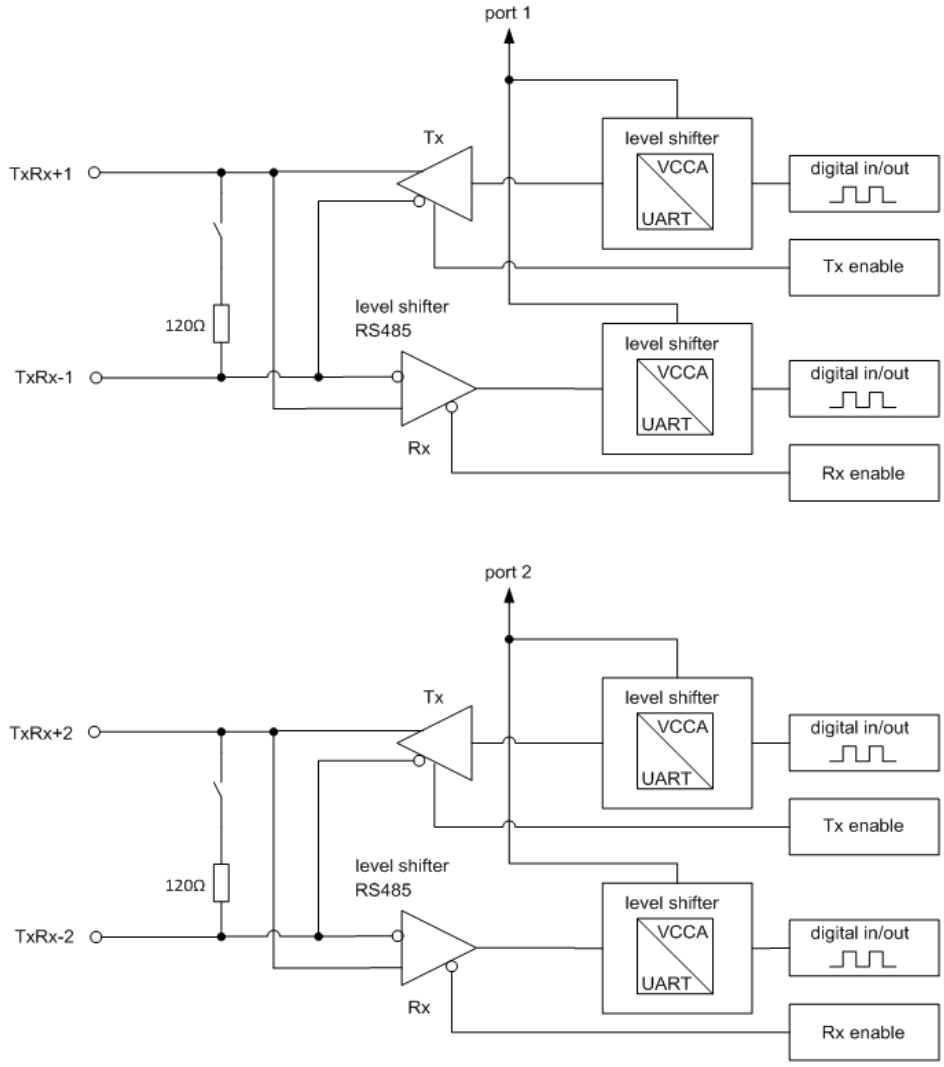

Figure **28:** RS485/RS422

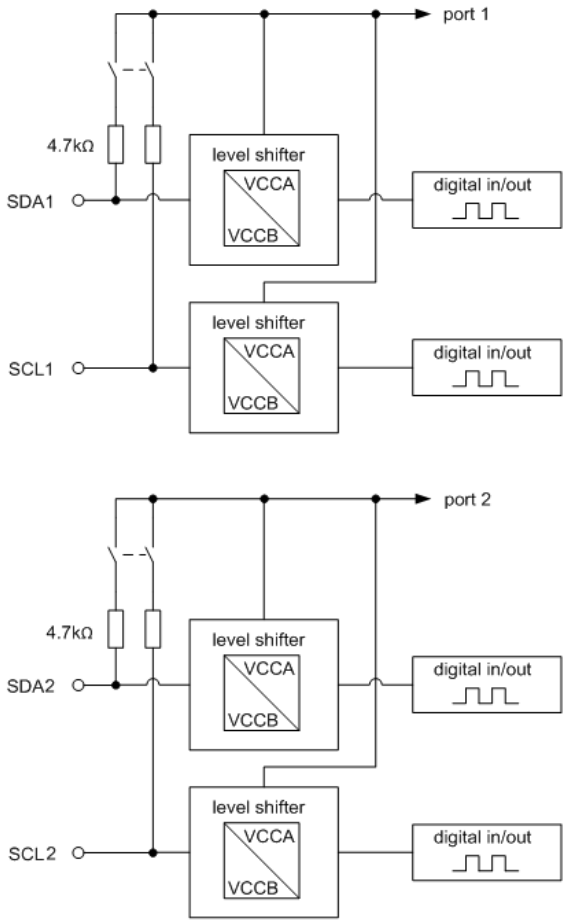

Figure **29:** I2C

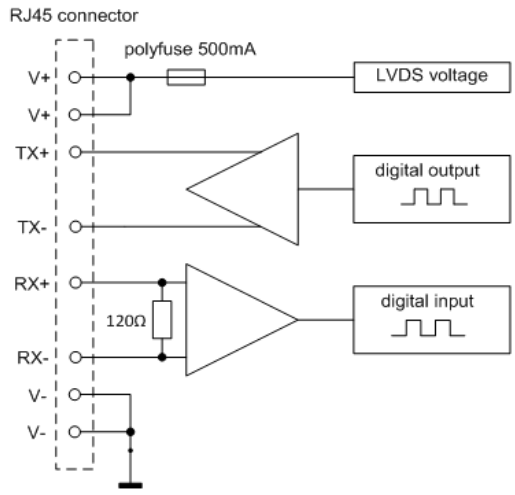

Figure **30:** LVDS

6.3.3 Using the Bus Bars

The general-purpose digital interfaces SPI, UART, RS232, RS485, RS422, I2C and LVDS have no bus bars.

The automotive sensor interfaces PSI5 and SENT have two independent internal bus bars:

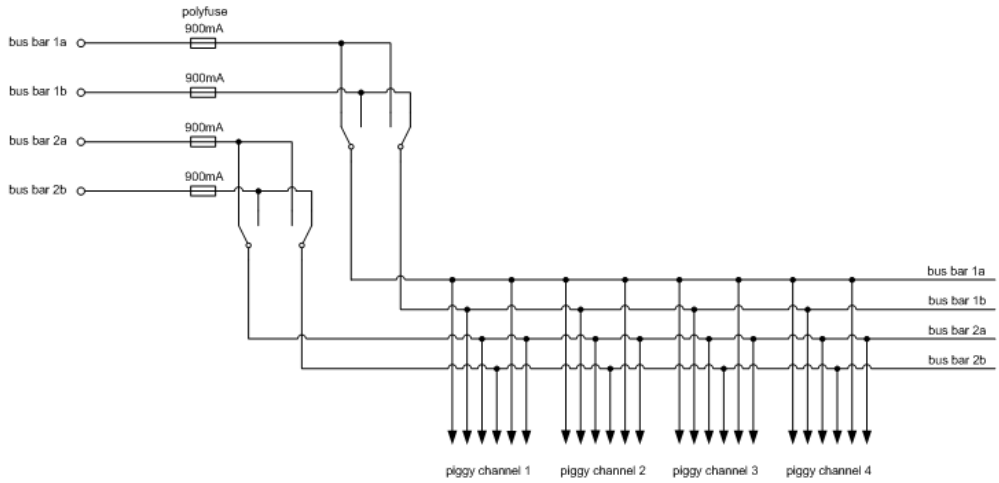

Figure **31:** Internal bus bars

6.3.4 Using the Digital Interfaces

Digital Voltage

The digital interfaces on the VT2710 are using one common digital input or output level. The voltage to set the digital level can be provided by an internal power supply or can be supplied externally at the VDD and GND connector. This can be selected for each of the two digital ports individually.

Parallel Usage

Because of the quantity of digital interfaces, the connectors on the rear side are shared by several interfaces. An overview which interface can be used at the same time is given with the following matrix. Exactly one of the functions can be selected independently for each of the three pin groups [2;3] or [4;5;6;7] or [8;9]. It is for example possible to use DIO pins [2;3] as native digital IOs, pins [4;5;6;7] as SPI channel with one chip select (CS) line and pins [8;9] as UART channel.

The digital I/Os can be accessed by the User FPGA, too. Therefore, the User FPGA I/Os are not listed separately.

Pin	Digital I/O	UART	SPI	I2C	RS-485
9	○ DIO1	◉ Tx	○ CS2		
8	DIO2	Rx	CS3		
7	○ DIO3		◉ SCLK		○ TxRx+
6	DIO4		MOSI		TxRx-
5	DIO5		MISO		OutEn
4	DIO6		CS1		
3	◉ DIO7		○ CS4	○ SDA	
2	DIO8		CS5	SCL	

Figure **32:** Pins

6.3.5 Digital I/O

The level shifters of the digital interfaces can also be used as general-purpose digital I/Os with an adjustable digital level and an adjustable data direction.

When using the I/O as input the threshold between low and high level is fixed and depends on the digital voltage. When using the I/Os as output the output level can be set to low (GND) or high (digital voltage).

On the VT2710 there are two digital I/O interfaces (with 8 I/O lines each) available. The data direction can be set to input or output for each I/O line individually. A bidirectional usage is not possible.

The digital I/Os can also be accessed by the User FPGA to implement user defined interfaces. In this mode, also the data direction of each I/O line is adjustable.

6.3.6 SPI

The SPI interface basically provides the signals SCLK, MISO, MOSI and CS1. Dependent on the parallel usage of the other digital interfaces there are up to 5 CS signals available. With the VT2710 a SPI master as well as a SPI slave can be simulated. In Master- as well as in Slave-Mode several chip select lines can be used.

For the SPI input signals the threshold between low and high level is fixed and depends on the digital voltage. For the SPI output signals the output level changes between low (GND) and high (digital voltage).

On the VT2710 there are two SPI interfaces available. The data direction will be automatically set for each I/O line individually dependent on the function at the SPI interface.

6.3.7 UART/RS232

The UART/RS232 interface allows a point-to-point connection with the signals Tx and Rx.

For the UART Rx signal, the threshold between low and high level is fixed and depends on the digital voltage. For the UART Tx signal, the output level changes between low (GND) and high (digital voltage).

For the RS232 interface, an internal level shifter can be added to the UART interface in order to provide the RS232 levels. Therefore, it is only possible to use either UART or RS232 on one channel.

On the VT2710 there are two UART/RS232 interfaces available.

For the RS232 interface, the same lines and connectors as for the UART interface are used. But an internal level shifter can be added to the UART interface to provide the RS232 level. It is only possible to use either UART or RS232 on one channel.

6.3.8 RS485/RS422

The RS485 interface allows connecting to an RS485 bus with the two differential signals TxRx+ and TxRx-. The interface works in half-duplex mode and supports data rates up to 16Mbps. The interface represents 1 unit load. Therefore, bus networks with 32 participants are possible. A termination resistance with 120 Ohm is assembled on the module and can be connected via relay.

On the VT2710 there are two RS485/RS422 interfaces available.

For RS422 the same lines and connectors as for RS485 are used. Therefore, it is only possible to use either RS485 or RS422.

6.3.9 I2C

The I2C interface allows connecting to the signals SCL and SDA of an I2C bus. Standard Mode (100 kb/s), Fast Mode (400 kb/s) and Fast Mode Plus (1.0 Mb/s) are supported. Both a master and a slave node can be simulated with the VT2710.

For the I2C signals SCL and SDA, the transceiver input threshold between low and high level is fixed and depends on the digital voltage. If the I2C bus is in idle mode, the signals SCL and SDA are held at high level (digital voltage). For low level, the I2C transceiver is pulling the signals SCL and SDA to GND.

If required, the signals SCL and SDA can be pulled to the digital voltage with 4.7 kOhm resistors. The resistors can be enabled with relays.

On the VT2710 there are two I2C interfaces available.

6.3.10 LVDS

The LVDS interface allows serial communication with high data rates over a longer distance.

This interface can be used for example to operate active probes, which can be placed near the device under test. The LVDS interface has therefore an own adjustable power supply. In this way the active probe can be directly supplied over a standard ethernet cable with the RJ45 socket on the VT2710. A 100 Ω termination resistance in the Rx path is already assembled on the VT2710.

On the VT2710 there are two LVDS interfaces available.

6.3.11 Displays

The current state of the relay switching for all four channels is indicated by LEDs on the front panel.

	LED	Description
PSI/SENT	PSI5	Lights up when the PSI5SENTpiggyA is configured for PSI5 operation. Blinks when communication is active.
	SENT	Lights up when the PSI5SENTpiggyA is configured for SENT operation. Blinks when communication is active.
	ECU	Lights up when an ECU simulation is configured.
	Sensor	Lights up when a Sensor simulation is configured.
	Short Circuit	Lights up when at least one short circuit relay is switched.
	Busbar	Lights up when at least one line is switched to a bus bar.
SPI	Ch1.	Lights up when the SPI interface on channel 1 is configured. Blinks when communication is active.
	Ch2.	Lights up when the SPI interface on channel 2 is configured. Blinks when communication is active.

	LED	Description
UART	Ch1.	Lights up when the UART, RS232, RS485 or RS422 interface on channel 1 is configured. Blinks when communication is active
	Ch2.	Lights up when the UART, RS232, RS485 or RS422 interface on channel 2 is configured. Blinks when communication is active
I2C	Ch1.	Lights up when the I2C interface on channel 1 is configured. Blinks when communication is active.
	Ch2.	Lights up when the I2C interface on channel 2 is configured. Blinks when communication is active
LVDS	Ch1.	Lights up when the LVDS interface on channel 1 is configured. Blinks when communication is active.
	Ch2.	Lights up when the LVDS interface on channel 2 is configured. Blinks when communication is active.

6.4 PSI5SENTpiggyA

For the automotive sensor interfaces PSI5 and SENT, the VT2710 provides four ports where a dedicated PSI5SENTpiggyA can be assembled. These automotive interfaces provide the following functionality:

- Support of PSI5, SENT and SENT/SPC sensor interfaces on one piggy
- Simulation of ECU and sensor
- Trace modus for monitoring the communication between ECU and sensor
- Relays to generate electrical errors like short circuits between the interface lines and ECU ground or V_{batt}.
- Adjustable busload (capacity and resistance)
- Galvanic isolation of the PSI5SENTpiggyA

6.4.1 Signal Path Switching

Signal Paths and Switching Options PSI5

The figures below show the various signal paths and switching options for one PSI5 channel on the PSI5SENTpiggyA. There are up to four independent piggy ports located on the VT2710 where the PSI5SENTpiggyA can be plugged.

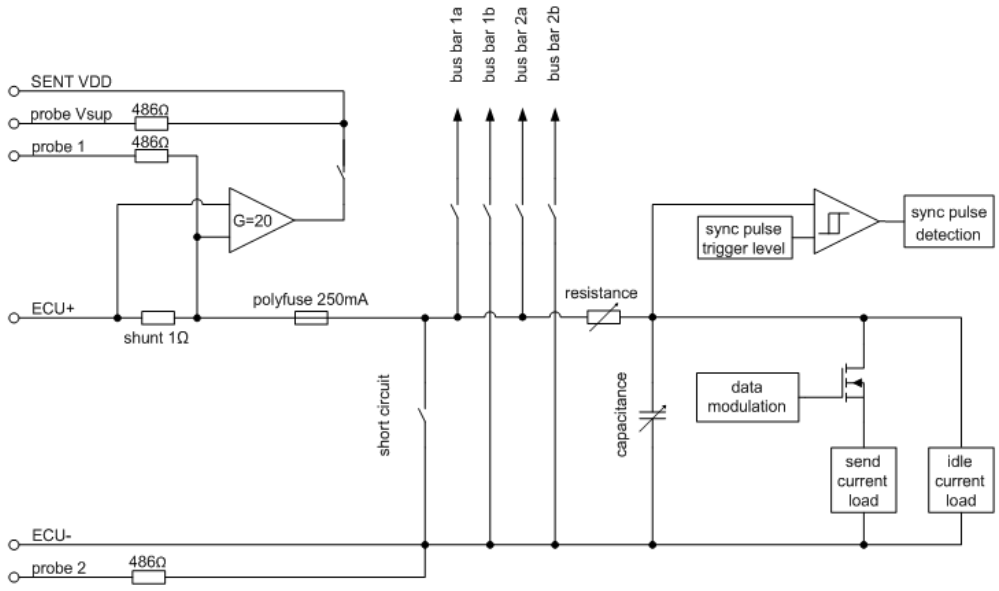

Figure **33:** ECU real Sensor simulated

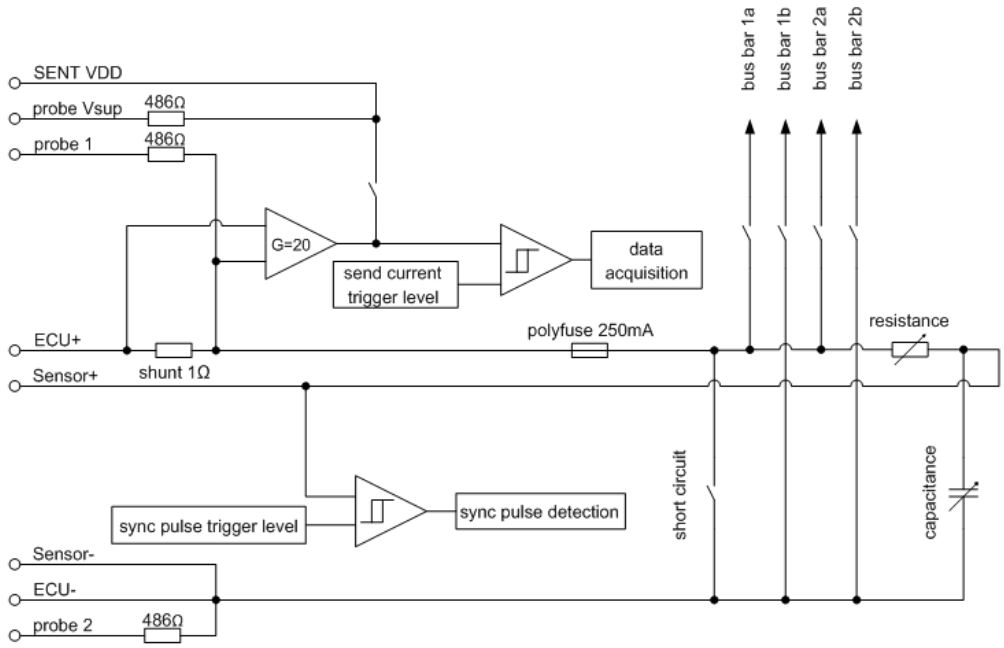

Figure **34:** ECU real Sensor real

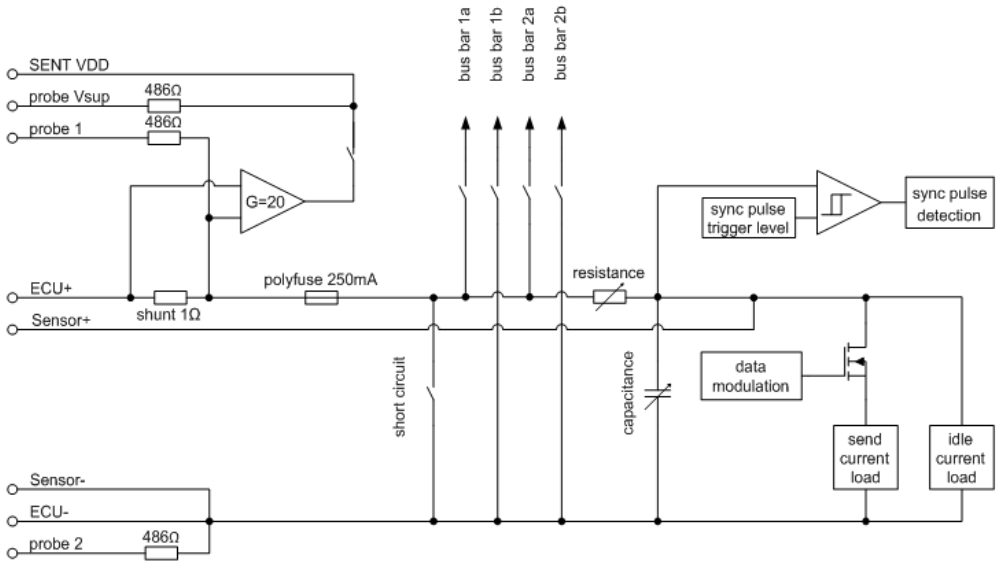

Figure **35:** ECU real Sensor simulated and real

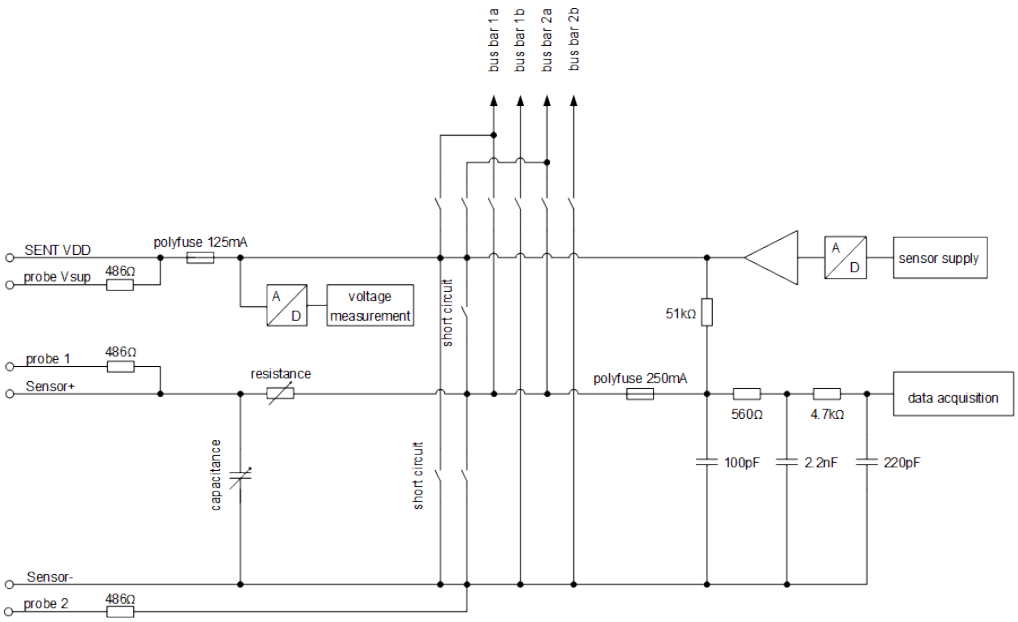

Figure **36:** ECU simulated Sensor real

Signal Paths and Switching Options SENT

The figures below show the various signal paths and switching options for one SENT channel on the PSI5SENTpiggyA. There are up to four independent piggy ports located on the VT2710 where the PSI5SENTpiggyA can be plugged.

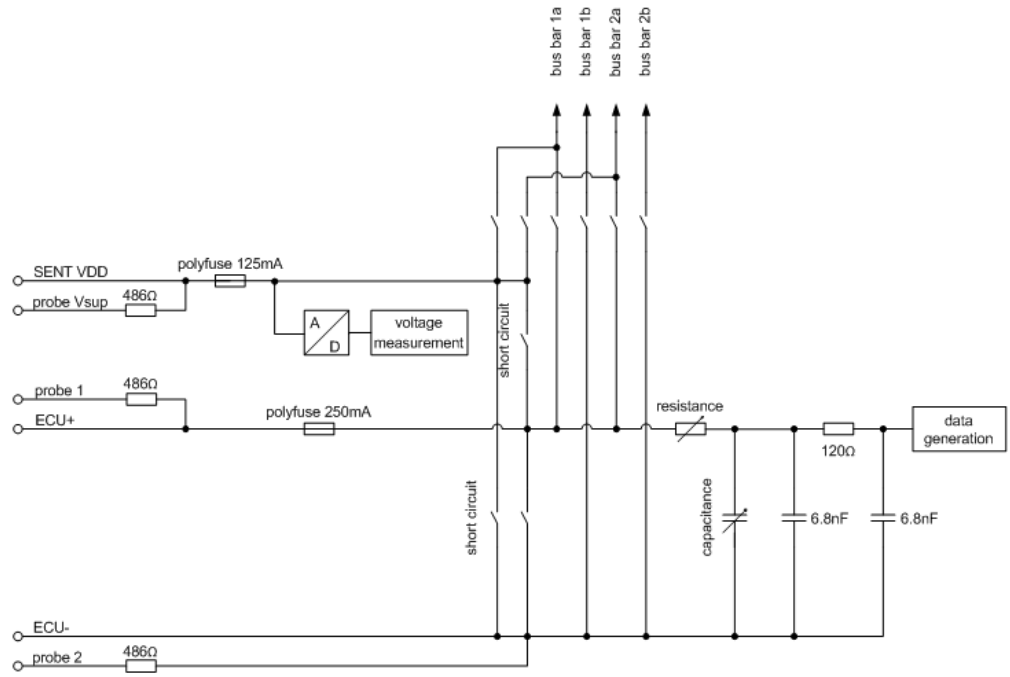

Figure **37:** ECU real Sensor simulated

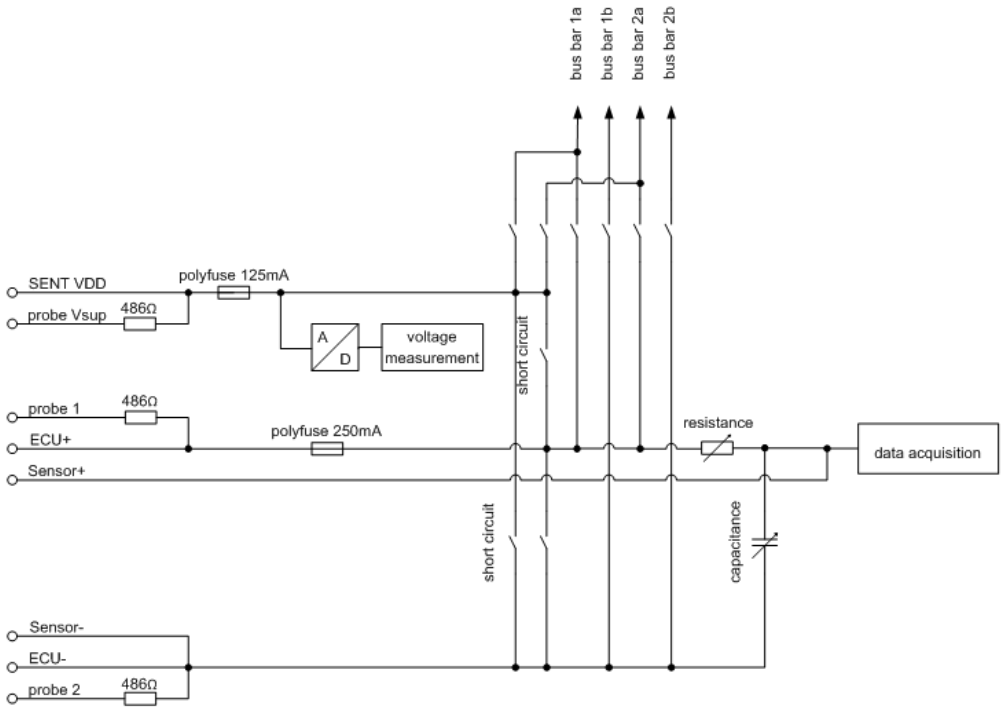

Figure **38:** ECU real Sensor real

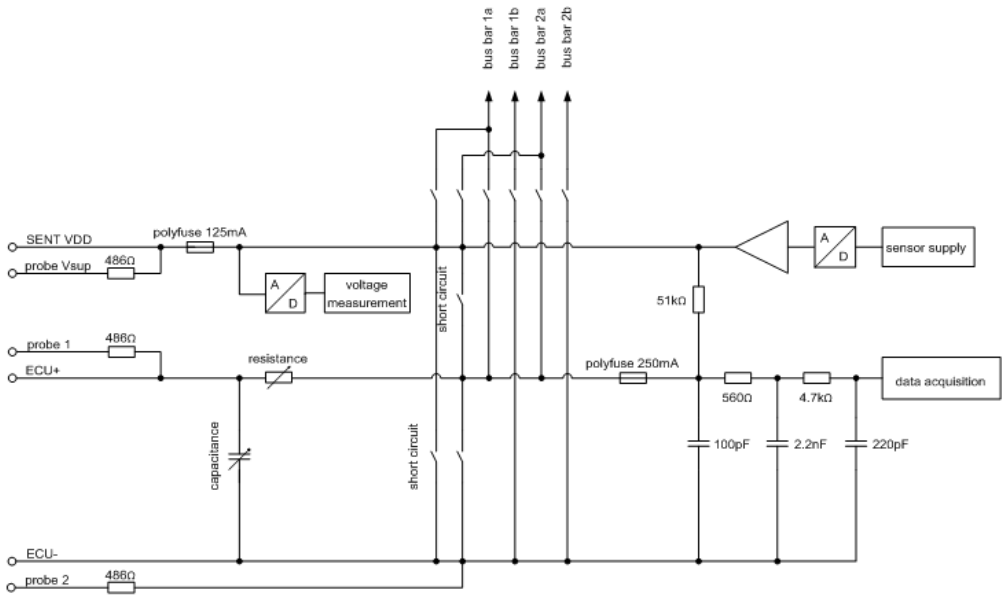

Figure **39:** ECU simulated Sensor real

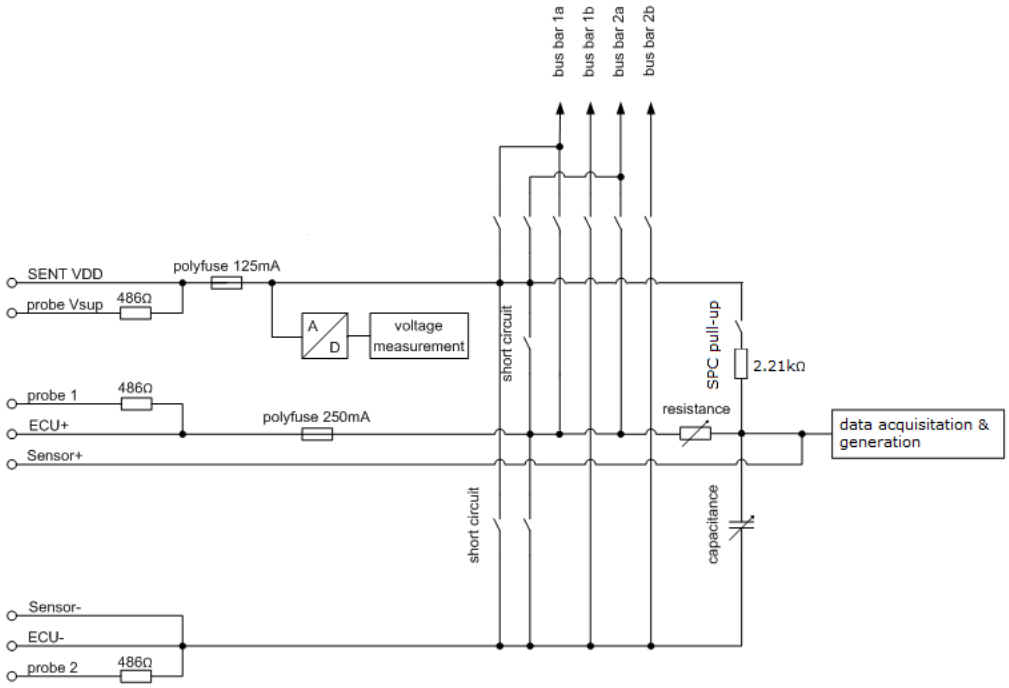

Figure **40:** SENT/SPC ECU real Sensor simulated

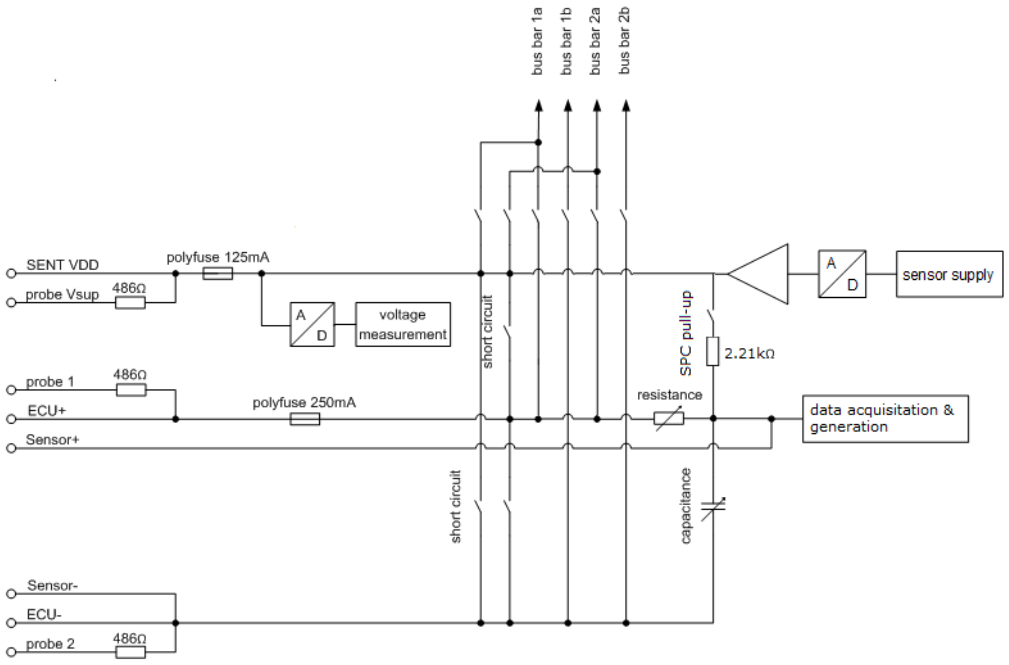

Figure **41:** Figure 2: SENT/SPC ECU simulated Sensor real

6.4.2 PSI5

The digital data stream of each channel's signal line is captured. This happens regardless of whether the channel is used as in input or an output. An adjustable switching threshold is used to differentiate between the High and Low states. This switching threshold is set for groups of channels, i.e. for channels 1...8 and 9...16 collectively.

The signal is sampled every 50 µs. The bit stream is made available to CANoe.

The module can also measure PWM signals. The frequency and duty cycle of the signal is determined and made available in CANoe.

For PSI5 different operation modes are possible:

- **Real ECU with simulated sensor**
  This mode can be used for testing an ECU. The ECU is connected, one or more sensors are simulated by the VT2710.
- **Real ECU with real sensor**
  This mode can be used to monitor the communication between the ECU and one or more sensors. Both the ECU and one or more sensors are connected to the VT2710, which behaves passive in this mode.
- **Real ECU with real and simulated sensors**
  This mode can be used for testing an ECU by using a mix of real and simulated sensors. The ECU is connected, one or more sensors are simulated by the VT2710. In addition, one or more real sensors can be connected too.
- **Simulated ECU with real sensor**
  This mode can be used for testing sensors. One or more sensors is connected, the ECU is simulated by the VT2710.

To set and vary the bus load according to the specification of PSI5, an adjustable RC network is provided on the PSI5SENTpiggyA. The value of the resistance and the capacity can be controlled with system variables.

When using the PSI5SENTpiggyA in any PSI5 operation mode, the voltage over the measurement shunt can be monitored on the SENT VDD line. For this purpose, the corresponding relay has to be switched. This feature is only available when using the PSI5 interface, as the SENT VDD line is not used in this case. The factor for the voltage conversion is 1:20 (1A/20V).

6.4.3 SENT

For SENT different operation modes are possible:

- **Real ECU with simulated sensor**
  This mode can be used for testing an ECU. The ECU is connected, the sensor is simulated by the VT2710.
- **Real ECU with real sensor**
  This mode can be used to monitor the communication between the ECU and the sensor. Both, the ECU and the sensor are connected to the VT2710, which behaves passive in this mode.
- **Simulated ECU with real sensor**
  This mode can be used for testing sensors. The sensor is connected, the ECU is simulated by the VT2710.

6.5 Connectors

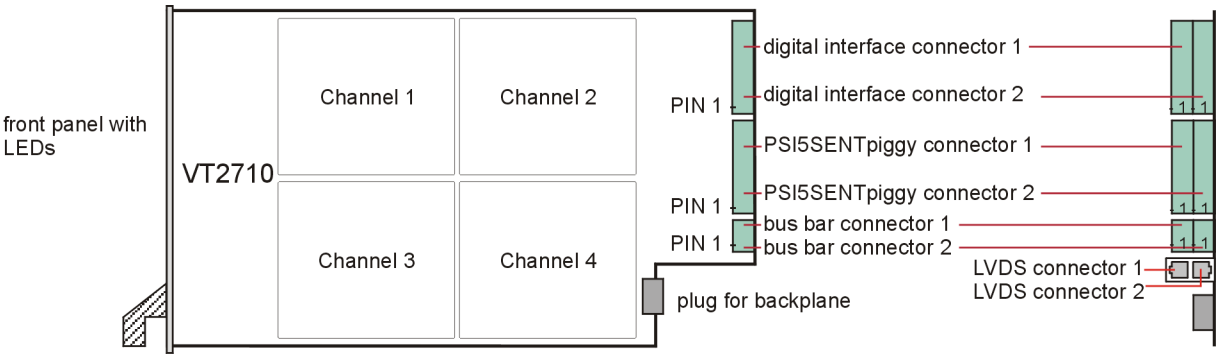

Figure **42:** Connectors

6.5.1 Digital Interface Connector 1

Plug type: Phoenix Contact MC 1,5/10-ST-3,81

Plug allocation (from top to bottom, viewed from the rear after installation):

Pin	Description
10	VDD1
9	Tx1 or CS2_1 or DIO_1_1 or FPGA_IO_1_1
8	Rx1 or CS3_1 or DIO_2_1 or FPGA_IO_2_1
7	SCLK1 or TxRx+1 or DIO_3_1 or FPGA_IO_3_1
6	MOSI1 or TxRx-1 or DIO_4_1 or FPGA_IO_4_1
5	MISO1or DIO_5_1 or FPGA_IO_5_1
4	CS1_1or DIO_6_1 or FPGA_IO_6_1
3	SDA1or CS4_1 or DIO_7_1 or FPGA_IO_7_1
2	SCL1 or CS5_1 or DIO_8_1 or FPGA_IO_8_1
1	GND

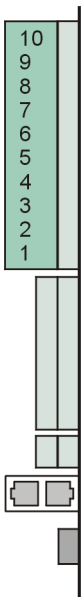

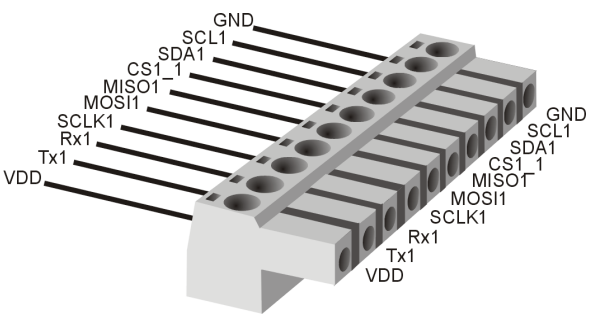

Figure **43:** Digital interface connector 1

6.5.2 Digital Interface Connector 2

Plug type: Phoenix Contact MC 1,5/10-ST-3,81

Plug allocation (from top to bottom, viewed from the rear after installation):

Pin	Description
10	VDD2
9	Tx2 or CS2_2 or DIO_1_2 or FPGA_IO_1_2
8	Rx2 or CS3_2 or DIO_2_2 or FPGA_IO_2_2
7	SCLK2 or TxRx+2 or DIO_3_2 or FPGA_IO_3_2
6	MOSI2 or TxRx-2 or DIO_4_2 or FPGA_IO_4_2
5	MISO2 or DIO_5_2 or FPGA_IO_5_2
4	CS1_2 or DIO_6_2 or FPGA_IO_6_2
3	SDA2 or CS4_2 or DIO_7_2 or FPGA_IO_7_2
2	SCL2 or CS5_2 or DIO_8_2 or FPGA_IO_8_2
1	GND

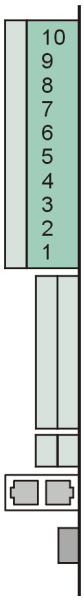

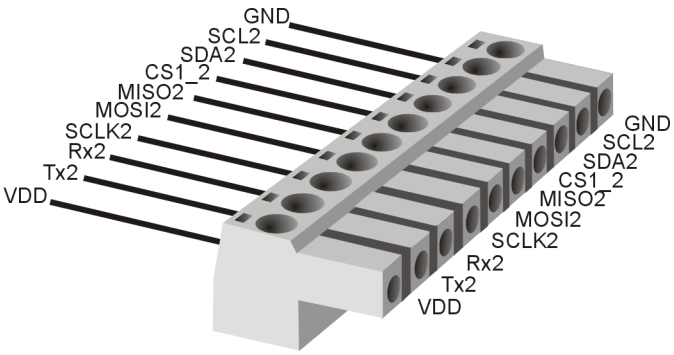

Figure **44:** Digital interface connector 2

6.5.3 PSI5SENTpiggyA Connector 1

Plug type: Phoenix Contact MC 1,5/10-ST-3,81

Plug allocation (from top to bottom, viewed from the rear after installation):

Pin	Description
10	SENT VDD1
9	ECU+1
8	ECU-1
7	Sensor+1
6	Sensor-1
5	SENT VDD3
4	ECU+3
3	ECU-3
2	Sensor+3
1	Sensor-3

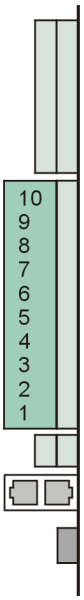

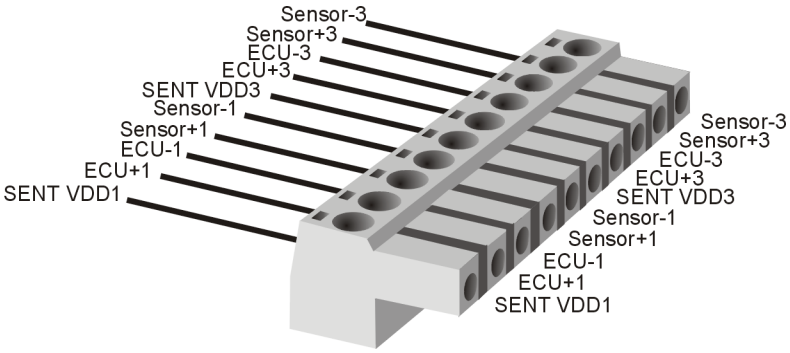

Figure **45:** PSI5SENTpiggyA connector 1

6.5.4 PSI5SENTpiggyA Connector 2

Plug type: Phoenix Contact MC 1,5/10-ST-3,81

Plug allocation (from top to bottom, viewed from the rear after installation):

Pin	Description
10	SENT VDD2
9	ECU+2
8	ECU-2
7	Sensor+2
6	Sensor-2
5	SENT VDD4
4	ECU+4
3	ECU-4
2	Sensor+4
1	Sensor-4

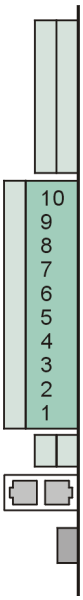

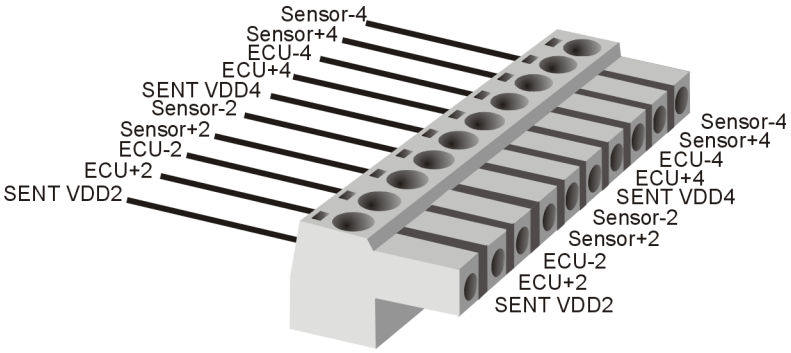

Figure **46:** PSI5SENTpiggyA connector 2

6.5.5 Bus Bar Connector 1

Plug type: Phoenix Contact MC 1,5/2-ST-3,81

Plug allocation (from top to bottom, viewed from the rear after installation):

Pin	Description
2	Bus bar 2, pin a
1	Bus bar 2, pin b

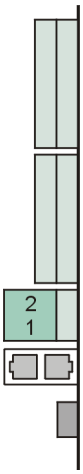

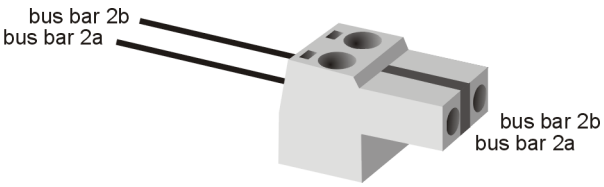

Figure **47:** Bus bar connector 1

6.5.6 Bus Bar Connector 2

Plug type: Phoenix Contact MC 1,5/2-ST-3,81

Plug allocation (from top to bottom, viewed from the rear after installation):

Pin	Description
2	Bus bar 1, pin a
1	Bus bar 1, pin b

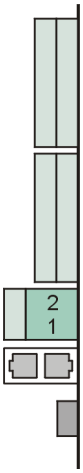

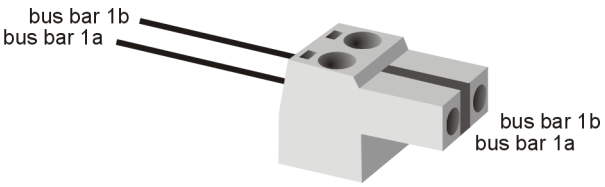

Figure **48:** Bus bar connector 2

6.5.7 LVDS Connector 1

Plug type: RJ45

Plug allocation of the RJ45 socket pin numbers:

Pin	Description
8	GND
7	GND
6	RX-
5	VDD
4	VDD
3	RX+
2	TX-
1	TX+

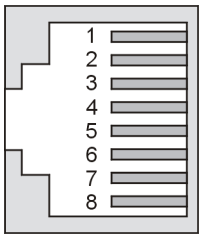

6.5.8 LVDS Connector 2

Plug type: RJ45

Plug allocation of the RJ45 socket pin numbers:

Pin	Description
8	GND
7	GND
6	RX-
5	VDD

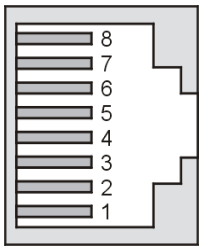

Pin	Description
4	VDD
3	RX+
2	TX-
1	TX+

6.5.9 Front Panel Measurement Connector

There are three measurement connectors (2 mm) on the front panel for each of the four PSI5/SENT channels on the circuit board (view on front panel after installation):

Pin	Connector	Description
1	Upper connector	ECU/Sensor +
Vsup.	Middle connector	SENT VDD, PSI5 current
2	Lower connector	ECU/Sensor -

The middle connector has two functions, dependent on the used interface. For SENT, the sensor supply voltage can be measured. For PSI5, the current can be measured as voltage over the measurement shunt with a conversion factor of 20 V/A. For example, 0.1 A corresponds to 2 V. The signal on the middle connector can be chosen by switching the corresponding relay.

6.6 Technical Data VT2710

6.6.1 General

Parameter	Min.	Typ.	Max.	Unit
Supply voltage (via the backplane)	10.8	12	13.2	V
Power consumption at 12.0 V > base board without PSI5SENTpiggyA > with one PSI5SENTpiggyA > with two PSI5SENTpiggyA > with three PSI5SENTpiggyA > with four PSI5SENTpiggyA		 4.6 5.1 6.7 8.7 10.5		 W W W W W
Temperature range	0		+55	°C
Dimensions VT2710 (length × width × depth)	300 x 173 x 36			mm
Dimensions PSI5SENTpiggyA (length × width × depth)	85 x 70 x 25			mm
Total weight VT2710	approx. 510			g
Total weight PSI5SENTpiggyA	approx. 70			g

6.6.2 PSI5 Interface

Parameter	Min.	Typ.	Max.	Unit
Voltage range				
> ECU+ to ECU-	0		24	V
> Sensor+ to Sensor-	0		24	V
Source current (ECU simulation)	0		200	mA
Sink current (Sensor simulation)				
> I_{low}	0		150	mA
> I_{high}	0		50	mA
Transit current (trace mode)			200	mA
Current modulation data rate (Sensor simulation)	100		200	kbps
Adjustable sync pulse slew rate (ECU simulation, rise and fall)	0.32		15	V/µs
Adjustable bus load range				
> Capacity	0		127	nF
> Resistance	0		15.5	Ω
Adjustable bus load step width				
> Capacity		1		nF
> Resistance		0.5		Ω
Current to Voltage Conversion		20		V/A

6.6.3 SENT Interface

Parameter	Min.	Typ.	Max.	Unit
Voltage range				
> SENT VDD to line ECU-/Sensor-	0		6	V
> ECU+/Sensor+ to ECU-/Sensor-	0		6	V
Source current (ECU simulation)	0		50	mA
Clock tick length (Sensor simulation)	1.4		200	µs

6.6.4 Digital Voltage

Parameter	Min.	Typ.	Max.	Unit
Voltage input range VDD	0		6	V
Voltage output range VDD	0		6	V
Output current	0		200	mA

6.6.5 SPI Interface

Parameter	Min.	Typ.	Max.	Unit
Input voltage range	0		6	V
Input voltage low level > at VDD 1.8 V > at VDD 3.3 V > at VDD 5.0 V			 0.63 0.8 1.5	 V V V
Input voltage high level > at VDD 1.8 V > at VDD 3.3 V > at VDD 5.0 V	 1.17 2 3.5			 V V V
Output voltage low level		0		V
Output voltage high level > at VDD 1.8 V > at VDD 3.3 V > at VDD 5.0 V		 1.8 3.3 5		 V V V
Output current > at VDD 1.8 V > at VDD 3.3 V > at VDD 5.0 V			 ±4 ±24 ±32	 mA mA mA
Data rate > Master simulation > Slave simulation	 0 0		 10 6	 Mbps Mbps

6.6.6 UART Interface

Parameter	Min.	Typ.	Max.	Unit
Input voltage range	0		6	V
Input voltage low level > at VDD 1.8 V > at VDD 3.3 V > at VDD 5.0 V			 0.63 0.8 1.5	 V V V
Input voltage high level > at VDD 1.8 V > at VDD 3.3 V > at VDD 5.0 V	 1.17 2 3.5			 V V V
Output voltage low level		0		V
Output voltage high level > at VDD 1.8 V > at VDD 3.3 V > at VDD 5.0 V		 1.8 3.3 5		 V V V
Output current > at VDD 1.8 V > at VDD 3.3 V > at VDD 5.0 V			 ±4 ±24 ±32	 mA mA mA
Data rate > Node simulation	 0		 1	 Mbps

6.6.7 RS232 Interface

Parameter	Min.	Typ.	Max.	Unit
Input voltage range	-30		+30	V
Input threshold voltage > low level > high level	 0.4	 1.2 1.6	 2.4	 V V
Input voltage hysteresis		0.65		V
Impedance	3	5	7	kΩ

Parameter	Min.	Typ.	Max.	Unit
Output voltage swing	±5	±9		V
Data rate			230	kbps

6.6.8 RS485/RS422 Interface

Parameter	Min.	Typ.	Max.	Unit
Common-mode input voltage range	-7		+12	V
Differential input threshold voltage	-0.2		+0.2	V
Input voltage hysteresis		30		mV
Impedance	12	30		kΩ
Common-mode output voltage			3	V
Data rate			10	Mbps

6.6.9 I2C Interface

Parameter	Min.	Typ.	Max.	Unit
Input voltage range	0		6	V
Input voltage low level			0.2	V
Input voltage high level > generally > at VDD 1.8 V > at VDD 3.3 V > at VDD 5.0 V	 1.4 2.9 4.6		 VDD + 0.5 2.3 3.8 5.5	 V V V V
Output voltage low level			0.25	V
Output voltage high level > at VDD 1.8 V > at VDD 3.3 V > at VDD 5.0 V	 1.26 2.31 3.5			 V V V
Data rate			1.6	Mbps
Pullup resistors (SCLx, SDAx)		4.7		kΩ

6.6.10 LVDS Interface

Parameter	Min.	Typ.	Max.	Unit
Supply voltage VDD	0		15	V

Parameter	Min.	Typ.	Max.	Unit
Output current	0		500	mA
Data rate	0		10	Mbps

7 VT2808 - Current Measurement Module

In this chapter you find the following information:

7.1 Purpose **125**
7.2 Installation **125**
7.3 Usage **125**
7.3.1 Basic Connection Scheme 125
7.3.2 Current Measurement 127
7.3.3 Voltage Measurement 127
7.3.4 External Shunt Measurement 127
7.3.5 Displays 128
7.4 Connectors **129**
7.4.1 Measurement Connector 1 (Channels 1 to 4) 129
7.4.2 Measurement Connector 2 (Channels 5 to 8) 130
7.4.3 Reference Connector 1 130
7.4.4 Reference Connector 2 131
7.5 Technical Data VT2808 ..... **132**
7.5.1 General 132
7.5.2 Current Measurement 132
7.5.3 External Shunt Measurement 132
7.5.4 Voltage Measurement 134

7.1 Purpose

The VT2808 provides eight current measurement channels for currents up to 16 A. The voltage at each input can be measured against a reference voltage or AGND. Each current measurement channel has three measurement ranges which are switched automatically to improve resolution.

7.2 Installation

Please follow the general installation instructions in chapter 2.1.2 Modules.

7.3 Usage

7.3.1 Basic Connection Scheme

The plug connectors that are arranged above the backplane on the back of the module can be used for the following connections:

- **Current measurement connection**:
  To measure the current, the current path needs to be interrupted and redirected via one of the VT2808 channels. The VT2808 hast eight current measurement channels consisting of a pin **Cin a** and a pin **Cin b**. The current that is flowing into one of those pins will is measured and flows out of the other pin. The current can flow in both directions and a current flow from pin **Cin a** to pin **Cin b** is considered positive. If the current flows from pin **Cin b** to pin **Cin a**, the current is considered negative.
  The current measurement of the VT2808 can be connected either high-side (upstream of the load) or low-side (to ground, downstream of the load).

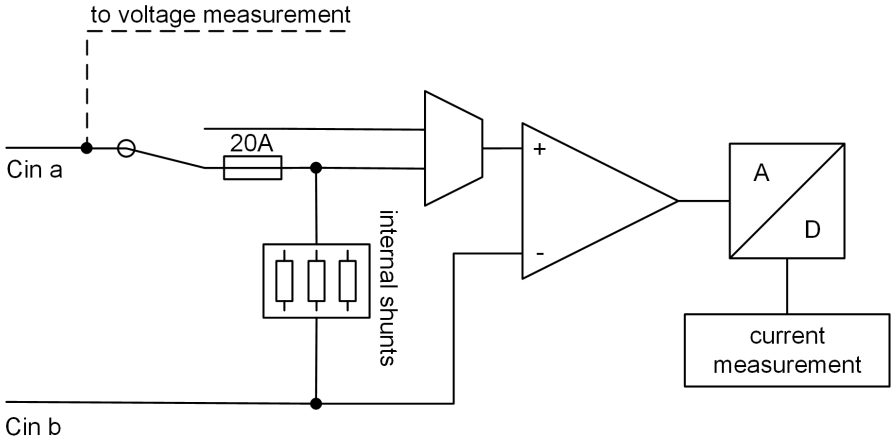

Figure **49:** Current measurement input

- **Current measurement connection with external shunt**:
  Instead of using the internal current measurement shunts, an external shunt can be connected to pin **a** and pin **b**. This method can be used to measure currents outside the measurement range of the internal ranges. If an external shunt is connected, the internal shunts can not be used and range switching is not available.
  The differential shunt voltage should not exceed +/- 100 mV. In CANoe, the used resistor value can be set to get the correct current values.

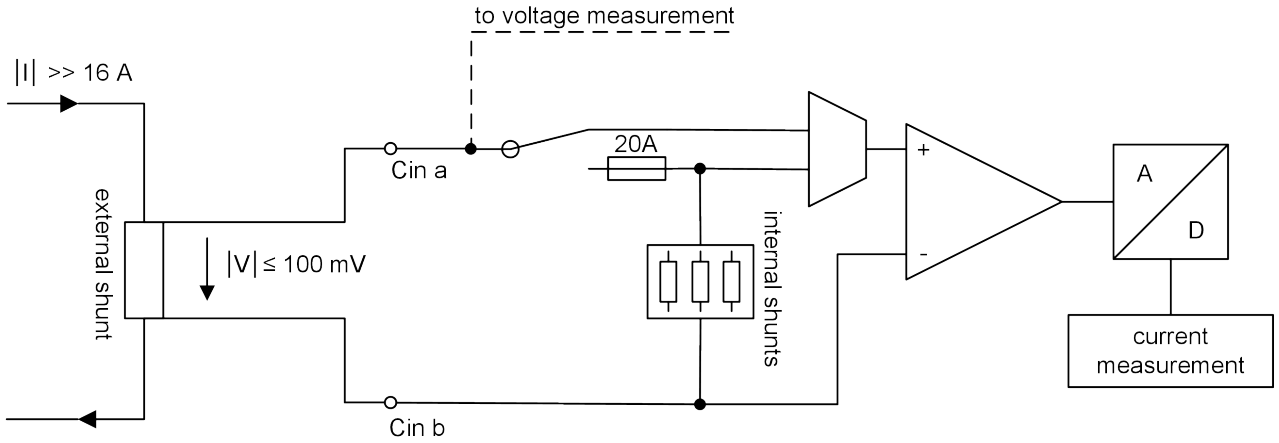

Figure **50:** External shunt measurement

> **Voltage measurement connection**:
The voltage on the pin **Cin a** of each channel is measured against either a reference voltage or AGND. Current and voltage can be measured simultaneously.

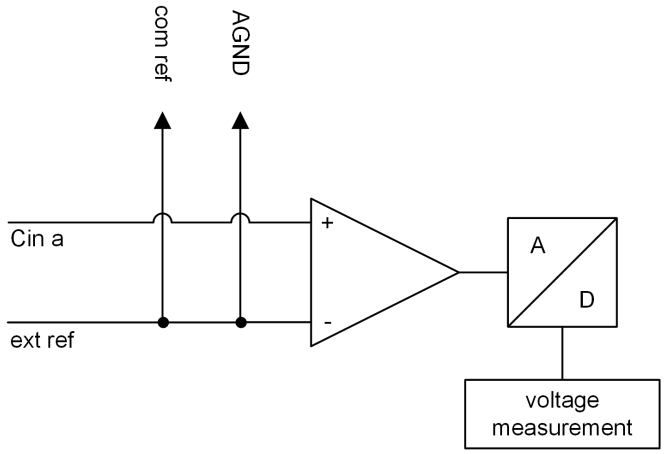

Figure **51:** Voltage measurement input

> **External reference connection**:
The VT2808 provides eight additional reference voltage inputs. Those voltages are used as reference for the voltage measurements on pin **Cin a**. Additionally, two relays per channel are available to connect the refence input either to an internal reference rail or AGND. The relays for switching the reference are always connected in pairs, see figures below.

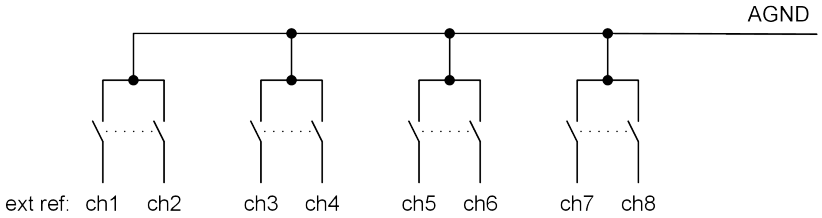

Figure **52:** AGND relays

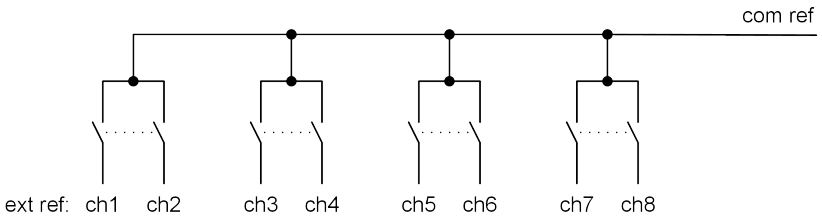

Figure **53:** ext ref relays

Example

If only one reference is needed for channels 1-4 those references can be connected internally and only one external wire to one of the reference inputs is needed. Channels 5 and 6 could be connected to AGND internally and channels 7 and 8 could still use individual references on their respective inputs.

7.3.2 Current Measurement

The current is measured by measuring the voltage drop across very low-value resistors (shunts).

The VT2808 measures currents continuously, prepares the results, and returns the corresponding momentary values as well as average values and min./max. values in CANoe. The integral time for the measurement can be

set in CANoe.

The current is measured in three current ranges (50 mA, 1 A and 16 A). Switching between ranges happens automatically.

7.3.3 Voltage Measurement

For the voltage measurement, the measurement data are prepared in the same way as for the current measurement. The same values are therefore available in CANoe.

The measuring range is +/-60 V.

7.3.4 External Shunt Measurement

If the internal shunts do not fit the measurement task and external shunt can be used individually on each channel. The external shunt relay needs to be switched and the external shunt value needs to be set in CANoe.

The measurement data is then returned in the same way as for the internal current measurement. The current is calculated using the external shunt value. This means that the current accuracy is dependent on the corresponding shunt resistor accuracy.

7.3.5 Displays

Voltage Indication

For all eight channels, there are two LEDs on the front panel that indicate whether the voltage between the two pins is positive or negative. These LEDs are marked with the letter **U**.

LED	Description
RED LED	Positive voltage greater than +3 V is applied
BLUE LED	Negative voltage below -3 V is applied

Current Indication

For all eight channels, there are two LEDs on the front panel that indicate whether the current into pin **a** is positive or negative. Those LEDs are marked with the letter **I**.

LED	Description
YELLOW LED	Positive current greater than +50 mA is applied
BLUE LED	Negative current below -50 mA is applied

External Shunt Measurement

For all eight channels, one LED indicates if the external shunt measurement is active.

LED	Description
GREEN LED	Lights up when external shunt measurement is active

Error Messages

The following errors are displayed:

- The red current LED blinks when an overcurrent is detected at the respective channel. In addition, the measurement is stopped in CANoe.
- The blue current LED of the respective channel blinks when a broken fuse is detected. In addition, the measurement is stopped in CANoe.
- All LEDs are blinking when another critical error is detected (e.g. board overtemperature). In addition, the measurement is stopped in CANoe.

Once the root cause of the problem is eliminated, the error state can be reset by restarting the measurement in CANoe.

7.4 Connectors

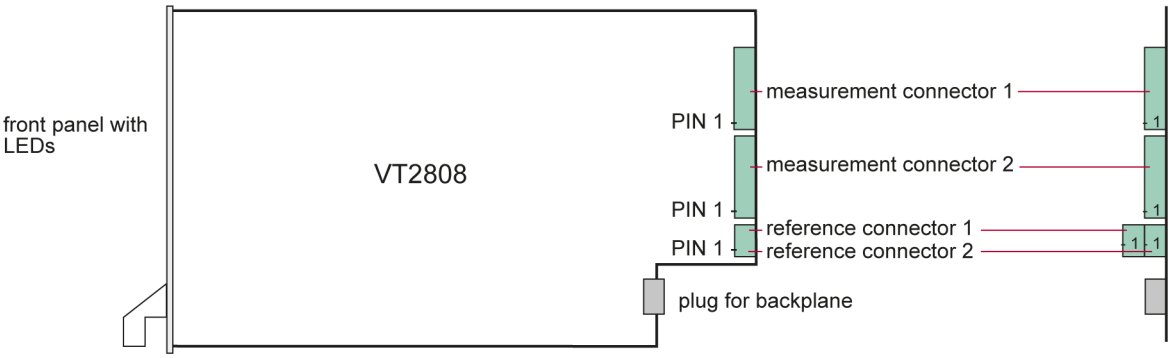

Figure **54:** Connectors

7.4.1 Measurement Connector 1 (Channels 1 to 4)

Plug type: Phoenix Contact MSTB 2,5 HC/8-ST-5,08

Plug allocation (from top to bottom, viewed from the rear after installation):

Pin	Description
8	channel 1, pin a
7	channel 1, pin b
6	channel 2, pin a
5	channel 2, pin b
4	channel 3, pin a
3	channel 4, pin a
2	channel 4, pin b
1	channel 4, pin b

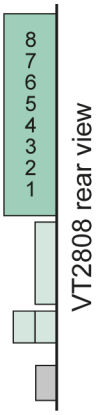

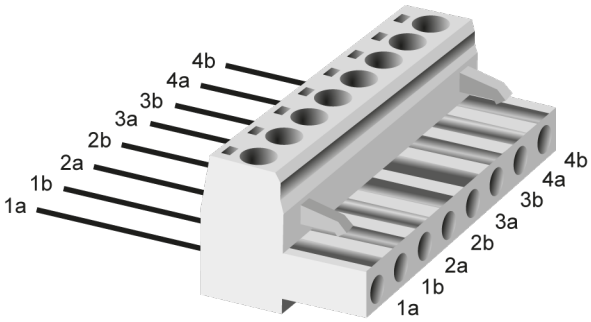

Figure **55:** Measurement connector 1

7.4.2 Measurement Connector 2 (Channels 5 to 8)

Plug type: Phoenix Contact MSTB 2,5 HC/8-ST-5,08

Plug allocation (from top to bottom, viewed from the rear after installation):

Pin	Description
8	channel 5,pin a
7	channel 5, pin b
6	channel 6, pin a
5	channel 6, pin b
4	channel 7, pin a
3	channel 7, pin b
2	channel 8, pin a
1	channel 8, pin b



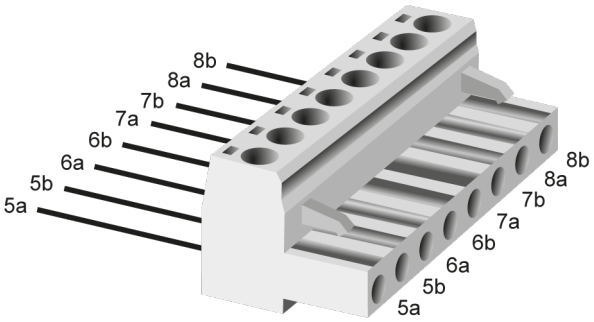

Figure **56:** Measurement connector 2

7.4.3 Reference Connector 1

Plug type: Phoenix Contact MC 1,5/4-ST-3,81

Plug allocation (from top to bottom, viewed from the rear after installation):

Pin	Description
4	channel 1, external reference input
3	channel 2, external reference input
2	channel 3, external reference input
1	channel 4, external reference input

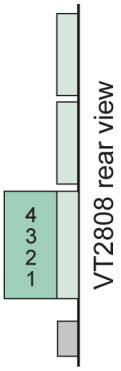

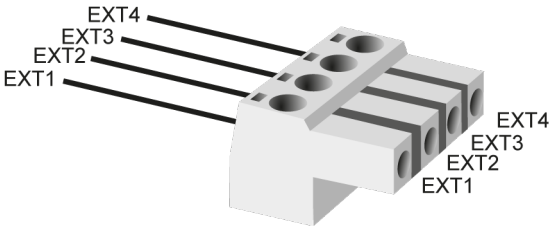

Figure **57:** Reference connector 1

7.4.4 Reference Connector 2

Plug type: Phoenix Contact MC 1,5/4-ST-3,81

Plug allocation (from top to bottom, viewed from the rear after installation):

Pin	Description
4	channel 5, external reference input
3	channel 6, external reference input
2	channel 7, external reference input
1	channel 8, external reference input

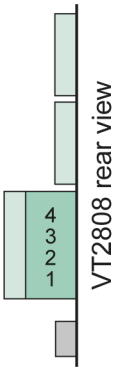

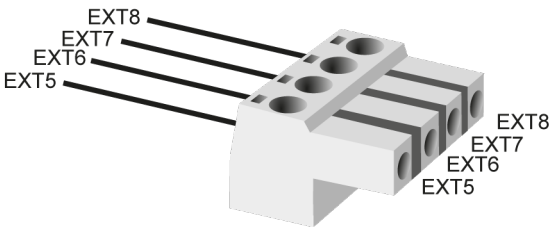

Figure **58:** Reference connector 2

7.5 Technical Data VT2808

7.5.1 General

Parameter	Min.	Typ.	Max.	Unit
Supply voltage (via the backplane)	10.8	12	13.2	V
Power consumption at 12.0 V > all relays off > all relays switched on		 6.1 16		 W W
Temperature range	0		+55	°C
Dimensions (length × width × depth)	300 x 173 x 36			mm
Total weight	approx. 432			g

7.5.2 Current Measurement

Parameter	Min.	Typ.	Max.	Unit
Measurement range	-16		16	A
Common mode voltage	-60		60	V
Current ranges (automatically switched)		3		
A/D converter > Resolution > Sample rate for raw data (per channel)		 16 250		 Bits kSamples/s
Accuracy at 23±5°C, ±(% of value + offset) > current range ≤ 50 mA (2 Ω) > current range ≤ 1 A (100 mΩ) > current range ≤ 16 A (5 mΩ)	 -(0+0.1 mA) -(0+10 mA) -(0+100 mA)		 +(0+0.1 mA) +(0+10 mA) +(0+100 mA)	

7.5.3 External Shunt Measurement

Parameter	Min.	Typ.	Max.	Unit
Measurement range	-100		100	mV
Common mode voltage	-60		60	V

Parameter	Min.	Typ.	Max.	Unit
A/D converter > Resolution > Sample rate for raw data (per channel)		 16 250		 Bits kSamples/s
Accuracy at 23±5°C, ±(% of value + offset)	-(0+0.3 mV)		+(0+0.3 mV)	

7.5.4 Voltage Measurement

Parameter	Min.	Typ.	Max.	Unit
Measurement range > column against AGND	 -60		 60	 V
A/D converter > Resolution > Sample rate for raw data (per column)		 16 250		 Bits kSamples/s
With adjustment: > Accuracy at 23±5°C, ±(% of value + offset)	 -(0+50 mV)		 +(0+50 mV)	

The accuracy of a measured voltage depends on two parts (% of value + offset). The first part (relative value) depends on the measured value; the second part (absolute value) is a fixed offset voltage.

As an example, if you measure a voltage of 10 V in the 60 V range, you get an accuracy of ±50 mV (0 % of 10 V + 50 mV).

8 VT2812 - General-Purpose Analog Output Module

In this chapter you find the following information:

8.1 Purpose **136**
8.2 Installation **136**
8.3 Usage **136**
8.3.1 Basic Connection Scheme 136
8.3.2 Voltage Stimulation 136
8.3.3 Displays 137
8.4 Connectors **138**
8.4.1 Voltage Simulation Connector 1 (Channels 1 to 4) 138
8.4.2 Voltage Stimulation Connector 2 (Channels 5 to 8) 139
8.4.3 Voltage Stimulation Connector 3 (Channels 9 to 12) 140
8.4.4 Output Ground Connector 140
8.5 Technical Data VT2812 ..... **141**
8.5.1 General 141
8.5.2 Voltage Stimulation 141

8.1 Purpose

The VT2812 provides 12 analog output channels.

The outputs of the VT2812 can be used universally. The module can be connected directly to inputs of control units. However, the module can also be used to control other analog signals, such as are needed for control in a test bed, for example.

8.2 Installation

Please follow the general installation instructions in chapter 2.1.2 Modules.

8.3 Usage

8.3.1 Basic Connection Scheme

The plug connectors that are arranged above the backplane on the back of the module can be used for the following connections:

> **Connection for voltage output**:
The voltage output at pin **a** is referred either to DGND or ECU GND or to a potential applied to pin **b**. The voltage that is output is always added to the voltage at pin **b**. For this reason, voltage potentials different from ground potential can also be connected to pin **b**.
If the output is to be referred to ground, line **b** can be connected via the corresponding relay either to ECU GND, which is connected to the module via a separate connector, or to the internal DGND.
The structure of output channels 1 - 12 is as follows:

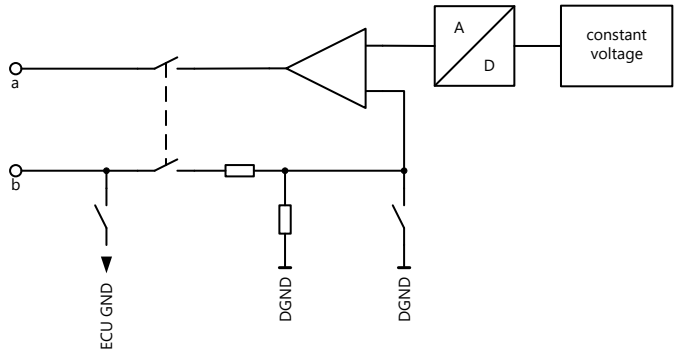

Figure **59:** Structure of output channels

> **ECU GND**
The output voltage can be referred to this potential by connecting the corresponding relay to line b or an output channel.

The cabling is done using Phoenix connectors, making it easy to switch them around. The test system can therefore be easily used for different devices, simply by connecting a different cable (connecting the VT module to the device to be tested).

To improve signal quality and accuracy in demanding environments an additional DGND pin is available on the output ground connector (see chapter 8.4.4 Output Ground Connector).

8.3.2 Voltage Stimulation

The voltage output has a single output range from -10 V to + 28 V. A voltage can be output either referred to DGND, ECU GND, or a different potential connected to pin b. The potential connected to pin

b has to be within the output range. Independent from the potential connected to pin **b**, the maximum output voltage cannot exceed the selected output range.



NOTICE!

- The output voltage on line **a** refers to the potential of line **b**. Therefore, line **b** must always be set to a fixed reference potential if voltage output is used. This can be done either by connecting a reference potential to line b or switching line **b** internal to DGND or ECU GND via relays.
- Do not connect line **b** to ground potential via relays if a potential different from ground is connected at pin **b**. Otherwise a short circuit may occur.
- The output voltage is not galvanically isolated.

8.3.3 Displays

Channel LEDs

Each output channel has two LEDs on the front panel that indicate whether the output is positive or negative.

LED	Description
RED LED	Output Voltage is above +1 V. If LED is flashing an overtemperature was detected on this channel.
BLUE LED	Output Voltage is below -1 V. If LED is flashing an overtemperature was detected on this channel.

Status LED

The status LED shows the overall state of the VT2812.

LED	Description
GREEN LED	Module is ready. Flashing indicates measurement is not active. A constant green light indicates measurement is running.
YELLOW LED	Module not ready.
RED LED	Error detected.

Error Messages

The following errors are displayed:

> The red and blue LEDs of the respective output channel flash when the output stage switches off due to overtemperature. In addition, the measurement is stopped in CANoe.

Once the root cause of the problem is eliminated, the error state can be reset by restarting the measurement in CANoe.

8.4 Connectors

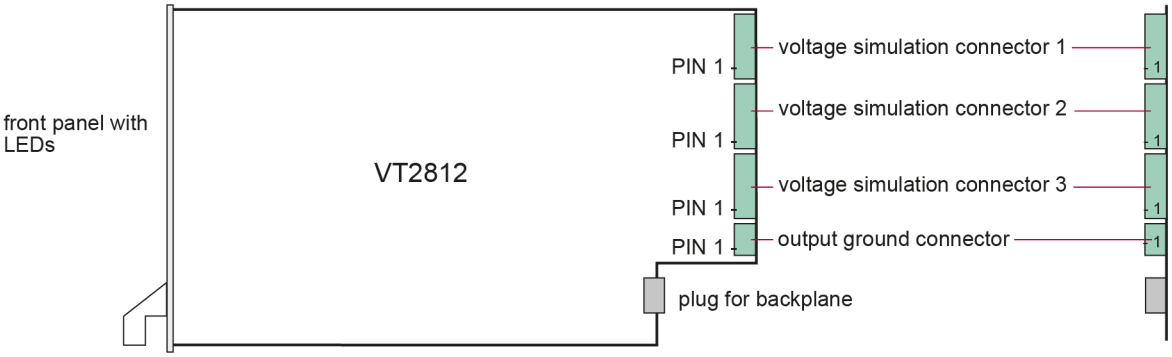

Figure **60:** Connectors

8.4.1 Voltage Simulation Connector 1 (Channels 1 to 4)

Plug type: Phoenix Contact MC 1,5/8-ST-3,81

Plug allocation (from top to bottom, viewed from the rear after installation):

Pin	Description
8	channel 1, voltage stimulation, pin a
7	channel 1, voltage stimulation, pin b
6	channel 2, voltage stimulation, pin a
5	channel 2, voltage stimulation, pin b
4	channel 3, voltage stimulation, pin a
3	channel 3, voltage stimulation, pin b
2	channel 4, voltage stimulation, pin a
1	channel 4, voltage stimulation, pin b

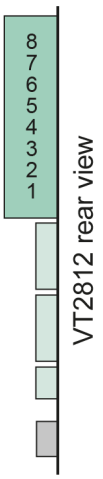

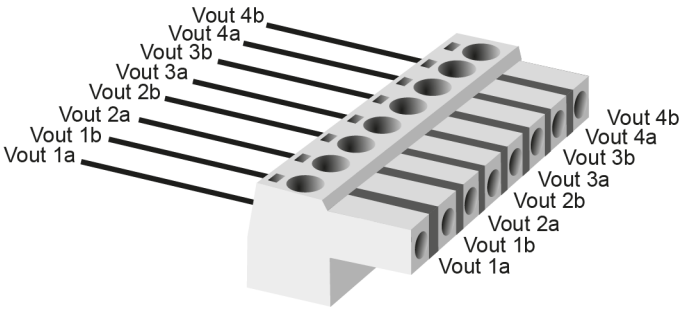

Figure **61:** Voltage stimulation connector 1

8.4.2 Voltage Stimulation Connector 2 (Channels 5 to 8)

Plug type: Phoenix Contact MC 1,5/8-ST-3,81

Plug allocation (from top to bottom, viewed from the rear after installation):

Pin	Description
8	channel 5, voltage stimulation, pin a
7	channel 5, voltage stimulation, pin b
6	channel 6, voltage stimulation, pin a
5	channel 6, voltage stimulation, pin b
4	channel 7, voltage stimulation, pin a
3	channel 7, voltage stimulation, pin b
2	channel 8, voltage stimulation, pin a
1	channel 8, voltage stimulation, pin b



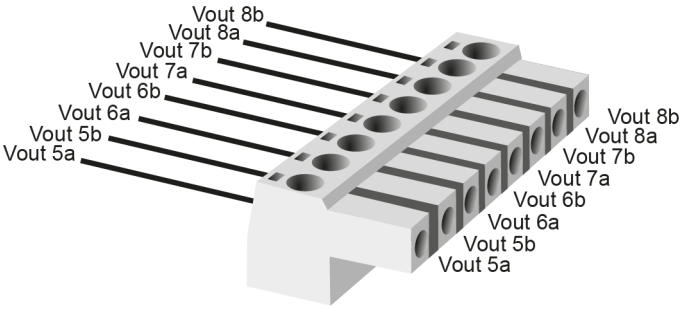

Figure **62:** Voltage stimulation connector 2

8.4.3 Voltage Stimulation Connector 3 (Channels 9 to 12)

Plug type: Phoenix Contact MC 1,5/8-ST-3,81

Plug allocation (from top to bottom, viewed from the rear after installation):

Pin	Description
8	channel 9, voltage stimulation, pin a
7	channel 9, voltage stimulation, pin b
6	channel 10, voltage stimulation, pin a
5	channel 10, voltage stimulation, pin b
4	channel 11, voltage stimulation, pin a
3	channel 11, voltage stimulation, pin b
2	channel 12, voltage stimulation, pin a
1	channel 12, voltage stimulation, pin b



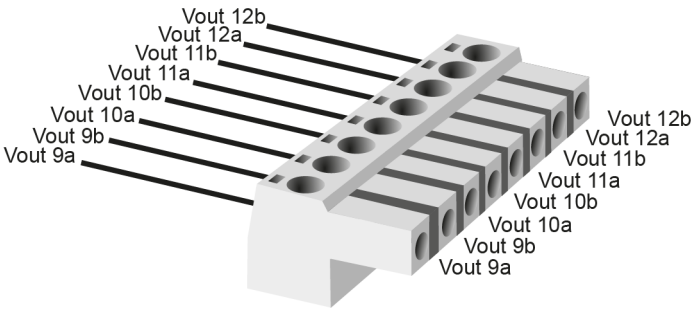

Figure **63:** Voltage stimulation connector 2

8.4.4 Output Ground Connector

Plug type: Phoenix Contact MC 1,5/2-ST-3,81

Plug allocation (from top to bottom, viewed from the rear after installation):

Pin	Description
2	DGND
1	ECU GND

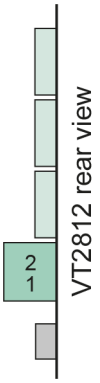

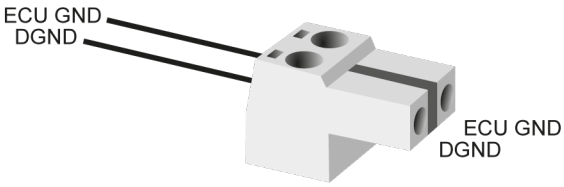

Figure **64:** Output ground connector

8.5 Technical Data VT2812

8.5.1 General

Parameter	Min.	Typ.	Max.	Unit
Supply voltage (via the backplane)	10.8	12	13.2	V
Power consumption at 12.0 V > all outputs and relays off > all outputs and relays activated		 10.1 33.0		 W W
Temperature range	0		+55	°C
Dimensions (length × width × depth)	300 x 173 x 36			mm
Total weight	approx. 430			g

8.5.2 Voltage Stimulation

Parameter	Min.	Typ.	Max.	Unit
Output voltage range > range -10 V...28 V	 -10		 28	 V
Output current			200	mA

Parameter	Min.	Typ.	Max.	Unit
D/A converter > Resolution > Settling time (from zero scale to full scale) > CMR > Recommended max. frequency		 16 2.5 2.5 20		 Bits µs mV/V kHz
Accuracy at 23±5°C, ±(% of value + offset) (output current < 50 mA) > range -10 V...28 V	 -(0+10 mV)		 +(0+10 mV)	
Slew Rate (resistive load, 20 mA)		10		V/µs

9 VT2816A - General-Purpose Analog I/O Module

In this chapter you find the following information:

9.1 Purpose **144**
9.1.1 VT2816A 144
9.1.2 VT2816A FPGA 144
9.2 Installation **144**
9.3 Usage **144**
9.3.1 Basic Connection Scheme 144
9.3.2 Measurement 146
9.3.3 Voltage Stimulation 146
9.3.4 Displays 147
9.4 Connectors **148**
9.4.1 Voltage Measurement Connector 1 148
9.4.2 Current Measurement Connector 149
9.4.3 Voltage Measurement Connector 2 150
9.4.4 Voltage Stimulation Connector 152
9.4.5 Output Ground Connector 153
9.5 Technical Data VT2816A **154**
9.5.1 General 154
9.5.2 Voltage Measurement 154
9.5.3 Current Measurement 156
9.5.4 Voltage Stimulation 156

9.1 Purpose

9.1.1 VT2816A

The VT2816A provides 12 analog measuring channels and 4 analog output channels.

The 12 input channels are used for voltage measurement. Alternatively, current can be measured on the first 8 channels using an integrated shunt resistor.

A voltage can be output on 4 additional independent channels.

The inputs and outputs of the VT2816A can be used universally. The module can be connected directly to inputs and outputs of control units. However, the module can also be used to measure or control other analog signals, such as are needed for control in a test bed, for example.

9.1.2 VT2816A FPGA

Basically the VT2816A FPGA has the same hardware functionality and features as the VT2816A and is therefore used like the standard VT2816A. Additionally, the VT2816A FPGA provides a second, dedicated FPGA, which has access to the VT System module's hardware and CANoe. It can be used for implementing custom functionality.

More information about the FPGA variants of the VT System modules can be found in chapter 26 User Programmable FPGA.

9.2 Installation

Please follow the general installation instructions in chapter 2.1.2 Modules.

9.3 Usage

9.3.1 Basic Connection Scheme

The plug connectors that are arranged above the backplane on the back of the module can be used for the following connections:

> **Connection for voltage measurement**:
Two pins per channel are available for the voltage measurement. The voltage to be measured is always connected to pin **a**, and the potential referred to by the voltage to pin **b**.
In differential measuring mode, the potential at pin **b** may differ from the ground potential. In single-ended measuring mode, line **b** is connected internally to AGND. In this case, no external connection to pin **b** should be made.

  The structure of channels 1 - 8 for voltage and current measurement has the following appearance:

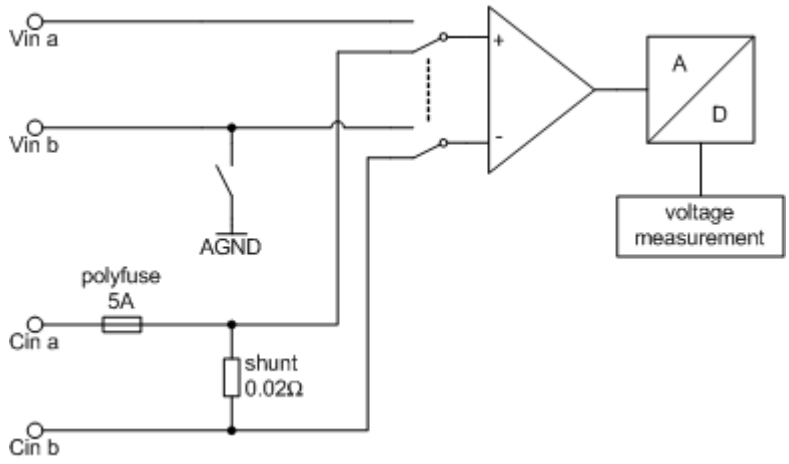

Figure **65:** Structure of channels 1 - 8

Only voltages can be measured on channels 9 - 12. The structure is thus as follows:

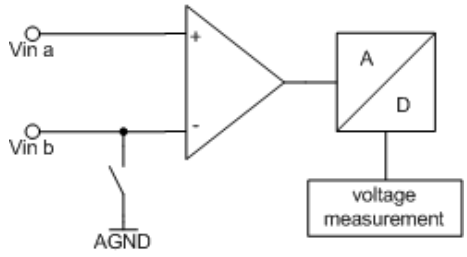

Figure **66:** Structure of channels 9 - 12

> **Connection for current measurement**:
For the current measurement, the current path to be measured is interrupted and the current between pin **a** and pin **b** is conducted through the module. For current flow from pin **a** to pin **b**, you receive measured values with a positive sign. If the current flows from pin **b** to pin **a,** the sign is negative.
Here, the VT2816A can be connected either high-side (upstream of the load) or low-side (to ground, downstream of the load).

If the corresponding channel is set to current measurement, voltage cannot be measured simultaneously on this channel, because the same connection is used for signal conditioning and signal evaluation for the voltage and current measurements.

> **Connection for voltage output**:
The voltage output at pin **a** is referred either to DGND or ECU GND or to a potential applied to pin **b**. The voltage that is output is always added to the voltage at pin **b**. For this reason, voltage potentials different from ground potential can also be connected to pin **b**.
If the output is to be referred to ground, line **b** can be connected via the corresponding relay either to ECU GND, which is connected to the module via a separate connector, or to the internal DGND.

The structure of output channels 1 - 4 is as follows:

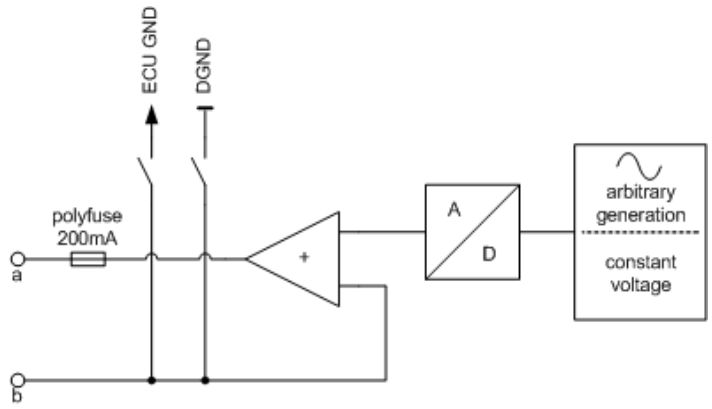

Figure **67:** Structure of output channels

> **ECU GND**:
> The output voltage can be referred to this potential by connecting the corresponding relay to line b or an output channel.

The cabling is done using Phoenix connectors, making it easy to switch them around. The test system can therefore be easily used for different devices, simply by connecting a different cable (connecting the VT module to the device to be tested).

To improve signal quality and accuracy in demanding environments an additional DGND pin is available on the output ground connector (see chapter 9.4.5 Output Ground Connector).

9.3.2 Measurement

Voltage Measurement

The VT2816A measures voltages continuously, prepares the results, and returns the corresponding momentary values as well as average values, rms values, and min./max. values in CANoe. The integral time for this can be set in CANoe.

To achieve better accuracy, the default measuring range of +/-60 V can be reduced to +/-10 V.

Current Measurement

The current is measured by measuring the voltage drop across a very low-value resistor (shunt).

For the current measurement, the measurement data are prepared in the same way as for the voltage measurement. The same values are therefore available in CANoe.

The measuring range is dimensioned for currents of +/-5 A and does not require a switch to a different measuring range.

9.3.3 Voltage Stimulation

The voltage output can be switched between two output ranges: 0...28 V and +/-10 V. A voltage can be output either referred to DGND, ECU GND, or a different potential connected to pin **b**. The potential connected to pin **b** has to be within the output range. Independent from the potential connected to pin **b**, the maximum output voltage cannot exceed the selected output range.

NOTICE!

- The output voltage on line **a** refers to the potential of line **b**. Therefore, line **b** must always be set to a fixed reference potential if voltage output is used. This can be done either by connecting a reference potential to line **b** or switching line **b** internal to DGND or ECU GND via relays.
- Don't connect line **b** to ground potential via relays if a potential different from ground is connected at pin **b**. Otherwise a short circuit may occur.
- The output voltage is not galvanically isolated.

In addition to outputting static voltages, it is also possible to load and output arbitrary wave forms to the module. For more detailed information on this, refer to the CANoe online help.

9.3.4 Displays

LEDs

Each input and output channel has two LEDs on the front panel that indicate whether the output or measured voltage or the measured current is positive or negative.

LED	Description
RED LED	Voltage measurement or stimulation: Voltage is above +1V Current measurement: Current is above +10mA
BLUE LED	Voltage measurement or stimulation: Voltage is below -1V Current measurement: Current is below -10mA
RED and BLUELED	Voltage measurement or stimulation: Mixed signal with voltage above +1V and below -1V Current measurement: Mixed signal with current above +10mA and below -10mA

The measurement channels also have a display indicating whether the corresponding channel is in current measuring mode or voltage measuring mode.

LED	Description
Current	...lights up when current measurement of the channel is active.

Error Messages

The following errors are displayed:

- The red and blue LEDs of the respective output channel flash when the output stage switches off due to overtemperature. In addition, the measurement is stopped in CANoe.

Once the cause of the problem is eliminated, this state can be reset by restarting the measurement in CANoe.

9.4 Connectors

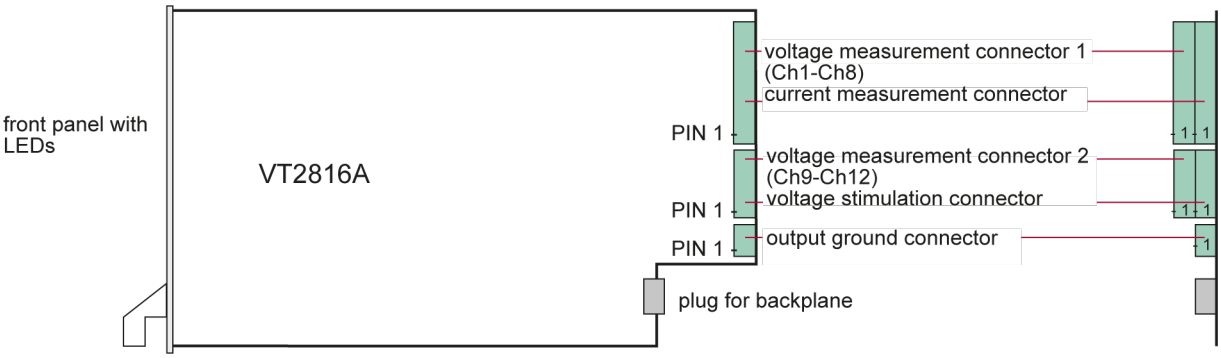

Figure **68:** Connectors

9.4.1 Voltage Measurement Connector 1

Plug type: Phoenix Contact MC 1,5/16-ST-3,81

Plug allocation (from top to bottom, viewed from the rear after installation):

Pin	Description
16	channel 1, voltage measurement, pin a
15	channel 1, voltage measurement, pin b
14	channel 2, voltage measurement, pin a
13	channel 2, voltage measurement, pin b
12	channel 3, voltage measurement, pin a
11	channel 3, voltage measurement, pin b
10	channel 4, voltage measurement, pin a
9	channel 4, voltage measurement, pin b
8	channel 5, voltage measurement, pin a
7	channel 5, voltage measurement, pin b
6	channel 6, voltage measurement, pin a
5	channel 6, voltage measurement, pin b
4	channel 7, voltage measurement, pin a



Pin	Description
3	channel 7, voltage measurement, pin b
2	channel 8, voltage measurement, pin a
1	channel 8, voltage measurement, pin b

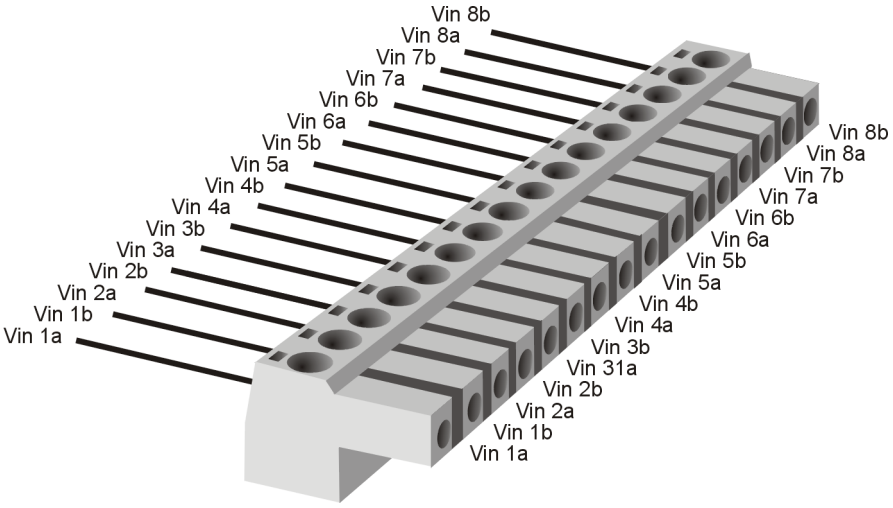

Figure **69:** Voltage measurement connector 1

9.4.2 Current Measurement Connector

Plug type: Phoenix Contact MC 1,5/16-ST-3,81

Plug allocation (from top to bottom, viewed from the rear after installation):

Pin	Description
16	channel 1, current measurement, pin a
15	channel 1, current measurement, pin b
14	channel 2, current measurement, pin a
13	channel 2, current measurement, pin b
12	channel 3, current measurement, pin a
11	channel 3, current measurement, pin b
10	channel 4, current measurement, pin a



Pin	Description
9	channel 4, current measurement, pin b
8	channel 5, current measurement, pin a
7	channel 5, current measurement, pin b
6	channel 6, current measurement, pin a
5	channel 6, current measurement, pin b
4	channel 7, current measurement, pin a
3	channel 7, current measurement, pin b
2	channel 8, current measurement, pin a
1	channel 8, current measurement, pin b

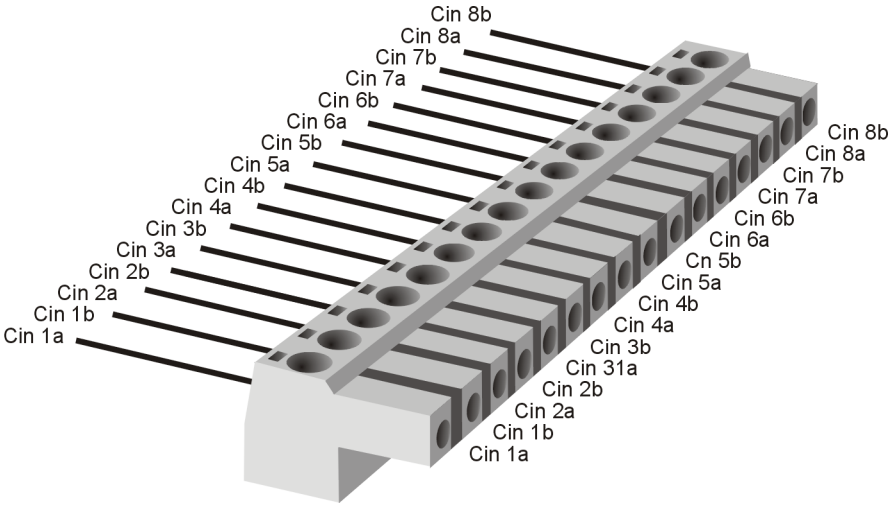

Figure **70:** Current measurement connector

9.4.3 Voltage Measurement Connector 2

Plug type: Phoenix Contact MC 1,5/8-ST-3,81

Plug allocation (from top to bottom, viewed from the rear after installation):

Pin	Description
8	channel 9, voltage measurement, pin a
7	channel 9, voltage measurement, pin b
6	channel 10, voltage measurement, pin a
5	channel 10, voltage measurement, pin b
4	channel 11, voltage measurement, pin a
3	channel 11, voltage measurement, pin b
2	channel 12, voltage measurement, pin a
1	channel 12, voltage measurement, pin b



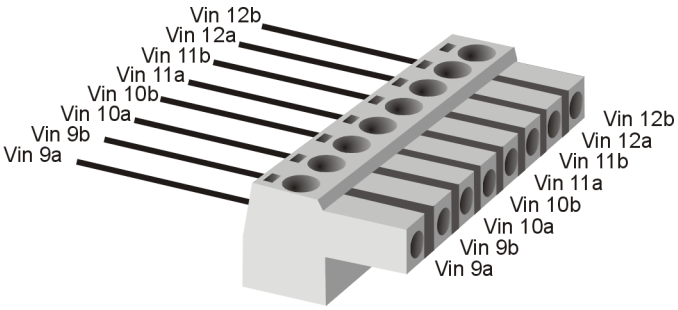

Figure **71:** Voltage measurement connector 2

9.4.4 Voltage Stimulation Connector

Plug type: Phoenix Contact MC 1,5/8-ST-3,81

Plug allocation (from top to bottom, viewed from the rear after installation):

Pin	Description
8	channel 13, voltage stimulation, pin a
7	channel 13, voltage stimulation, pin b
6	channel 14, voltage stimulation, pin a
5	channel 14, voltage stimulation, pin b
4	channel 15, voltage stimulation, pin a
3	channel 15, voltage stimulation, pin b
2	channel 16, voltage stimulation, pin a
1	channel 16, voltage stimulation, pin b



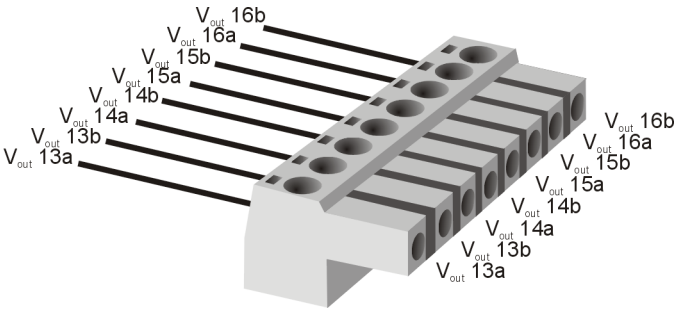

Figure **72:** Voltage stimulation connector

9.4.5 Output Ground Connector

NOTICE!

Pin 2 of the output ground connector changed from not connected to DGND. Please make sure no short circuit is created.

Plug type: Phoenix Contact MC 1,5/2-ST-3,81

Plug allocation (from top to bottom, viewed from the rear after installation):

Pin	Description
2	DGND
1	ECU GND

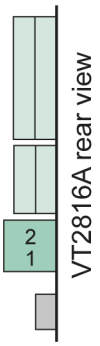

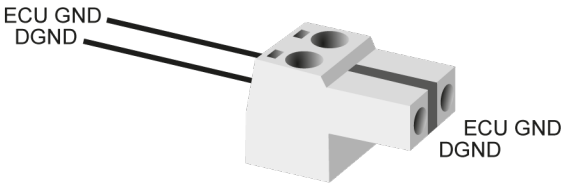

Figure **73:** Output ground connector

9.5 Technical Data VT2816A

9.5.1 General

Parameter	Min.	Typ.	Max.	Unit
Supply voltage (via the backplane)	10.8	12	13.2	V
Power consumption at 12.0 V > no operation > Ch1 – Ch8 in current measurement mode > voltage measurement to ground (single-ended) selected for all voltage measurement channels > output range +/-10V selected for all output channels > output to ground (DGND or ECU GND) selected for all output channels		 4.9 7.1 6.4 6.0 5.4		 W W W W W
Temperature range	0		+55	°C
Dimensions (length × width × depth)	300 x 173 x 36			mm
Total weight	approx. 490			g

9.5.2 Voltage Measurement

Parameter	Min.	Typ.	Max.	Unit
Measurement range (differential /single-ended) > range +/-10 V > range +/-60 V	 -10 -60		 10 60	 V V
Impedance > range +/-10 V > range +/-60 V	 1 1			 GΩ MΩ
A/D converter > Resolution > Sample rate for raw data (per channel)		 16 250		 Bits kSamples/s
Accuracy at 23±5°C, ±(% of value + offset) > range +/-10 V > range +/-60 V	 -(0+10 mV) -(0+50 mV)		 +(0+10 mV) +(0+50 mV)	

The accuracy of a measured voltage depends on two parts (% of value + offset). The first part (relative value) depends on the measured value; the second part (absolute value) is a fixed offset voltage.

As an example, if you measure a voltage of -5 V in the ±10 V range, you get an accuracy of ±10 mV (0 % of 5 V + 10 mV).

If you measure the same voltage in the ±60 V range, you get only an accuracy of ±50 mV (0 % of 5 V + 50 mV).

9.5.3 Current Measurement

Parameter	Min.	Typ.	Max.	Unit
Measurement Range	-4.5		4.5	A
Common mode voltage	-60		60	V
Shunt Resistance		20		mΩ
A/D converter > Resolution > Sample rate for raw data (per channel)		 16 250		 Bits kSamples/s
Accuracy at 23±5°C, ±(% of value + offset) @ 12V	-50 mA		+50 mA	
Common Mode Factor		+/- 1		mA/V

9.5.4 Voltage Stimulation

Parameter	Min.	Typ.	Max.	Unit
Output voltage range > range +/-10 V > range 0...28 V	 -10 0		 10 28	 V V
Output current			200	mA
D/A converter > Resolution > Settling time (from zero scale to full scale) > Recommended max. frequency		 16 0.5 250		 Bits µs kHz
Accuracy at 23±5°C, ±(% of value + offset) (output current < 50 mA) > range +/-10 V > range 0...28 V	 -(0+10 mV) -(0+10 mV)		 +(0+10 mV) +(0+10 mV)	
Slew Rate (resistive load, 20 mA)		15		V/µs

10 VT2820 – General-Purpose Relay Module

In this chapter you find the following information:

10.1 Purpose **158**
10.2 Installation **158**
10.3 Usage **158**
10.4 Connectors **159**
10.4.1 Relay Connector 1 159
10.4.2 Relay Connector 2 160
10.4.3 Relay Connector 3 161
10.4.4 Relay Connector 4 163
10.4.5 Bus Bar Connector 163
10.5 Technical Data VT2820 ..... **164**
10.5.1 General 164
10.5.2 Relays 164
10.5.3 Fuses 166

10.1 Purpose

The VT2820 provides 20 relay channels. These can be used for example to switch various signal paths in a test system, to realize a switch matrix, or to generate errors like short-circuits.

10.2 Installation

Please follow the general installation instructions in chapter 2.1.2 Modules.

10.3 Usage

The VT2820 provides several relays on 20 channels. The contacts of these relays are connected to the terminals at the backside of the module and they can be wired externally.

On the module two different relay channels are implemented:

> The channels 1-12 are realized as normally open contacts.

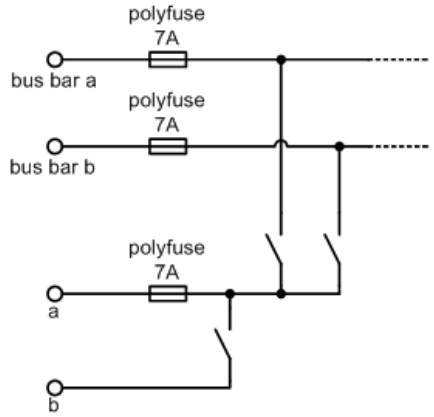

Pin a can be switched to pin b. Additionally it can be switched to one of the both bus bars a or b. On the bus bars e.g. the battery voltage or ground can be connected. Using the relays an ECU input connected to pin a can be switched to the corresponding potentials. To avoid short circuits, both bus bars cannot be activated at the same time.

> The channels 13-20 are realized as changeover contacts.

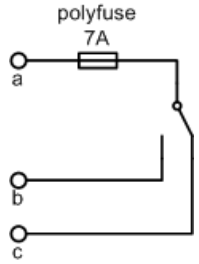

Pin a can be switched to pin b or pin c. If the relay is inactive, pin a is connected with pin c.

The defined maximum current is limited by the resettable fuses (polyfuse 7A). Currents near the defined maximum may be used only for some time. After this the fuses interrupt the current. When the fuse is cooled down, it conducts current again. The trip time of the polyfuse depends on the current and the ambient temperature (see 8.5.3 Fuses).

Front LEDs An LED on the front panel displays the switch position of the relay. If the relay is activated, the LED is on.

10.4 Connectors

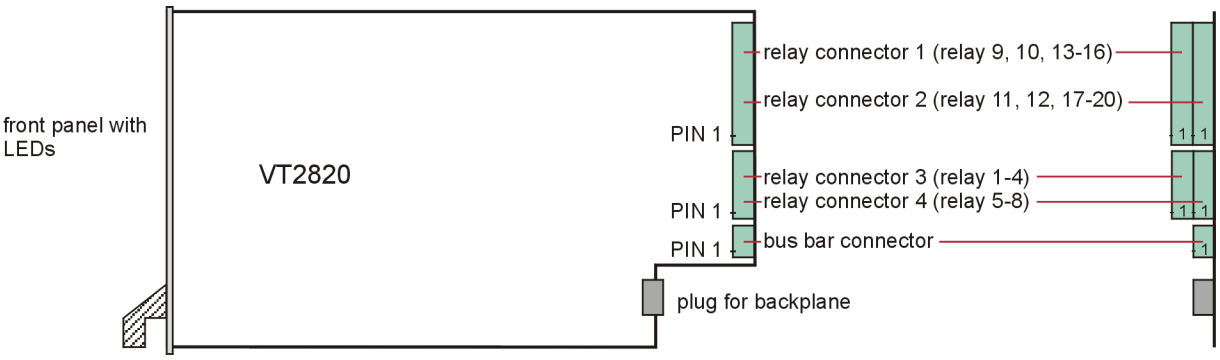

Figure **74:** Connectors

10.4.1 Relay Connector 1

Plug type: Phoenix Contact MC 1,5/16-ST-3,81

Plug allocation (from top to bottom, viewed from the rear after installation):

Pin	Description
16	channel 9, normally open relay contact a
15	channel 9, normally open relay contact b
14	channel 10, normally open relay contact a
13	channel 10, normally open relay contact b
12	channel 13, changeover relay contact a
11	channel 13, changeover relay contact b
10	channel 13, changeover relay contact c
9	channel 14, changeover relay contact a
8	channel 14, changeover relay contact b
7	channel 14, changeover relay contact c
6	channel 15, changeover relay contact a
5	channel 15, changeover relay contact b
4	channel 15, changeover relay contact c



Pin	Description
3	channel 16, changeover relay contact a
2	channel 16, changeover relay contact b
1	channel 16, changeover relay contact c

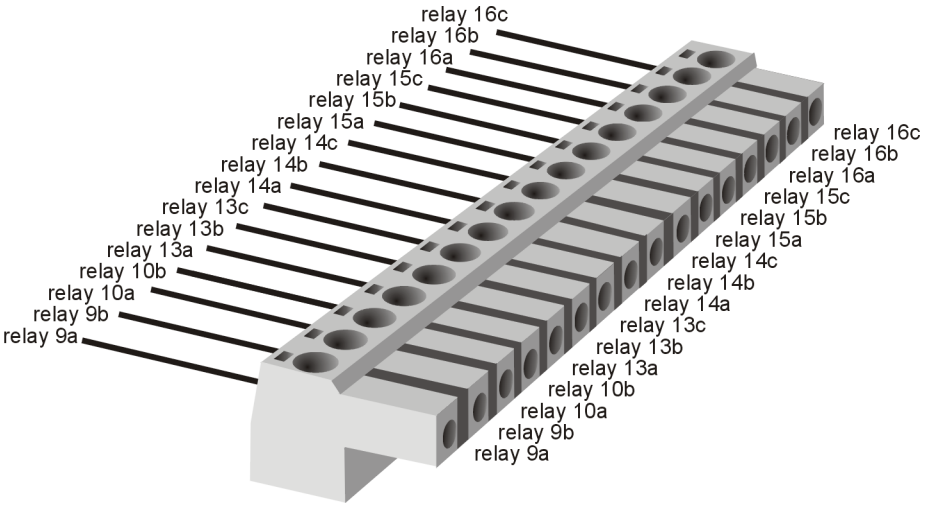

Figure **75:** Relay connector 1

10.4.2 Relay Connector 2

Plug type: Phoenix Contact MC 1,5/16-ST-3,81

Plug allocation (from top to bottom, viewed from the rear after installation):

Pin	Description
16	channel 11, normally open relay contact a
15	channel 11, normally open relay contact b
14	channel 12, normally open relay contact a
13	channel 12, normally open relay contact b
12	channel 17, changeover relay contact a
11	channel 17, changeover relay contact b
10	channel 17, changeover relay contact c

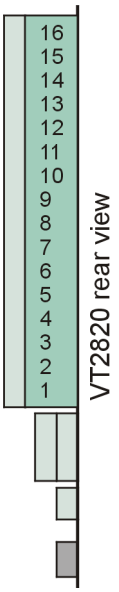

Pin	Description
9	channel 18, changeover relay contact a
8	channel 18, changeover relay contact b
7	channel 18, changeover relay contact c
6	channel 19, changeover relay contact a
5	channel 19, changeover relay contact b
4	channel 19, changeover relay contact c
3	channel 20, changeover relay contact a
2	channel 20, changeover relay contact b
1	channel 20, changeover relay contact c

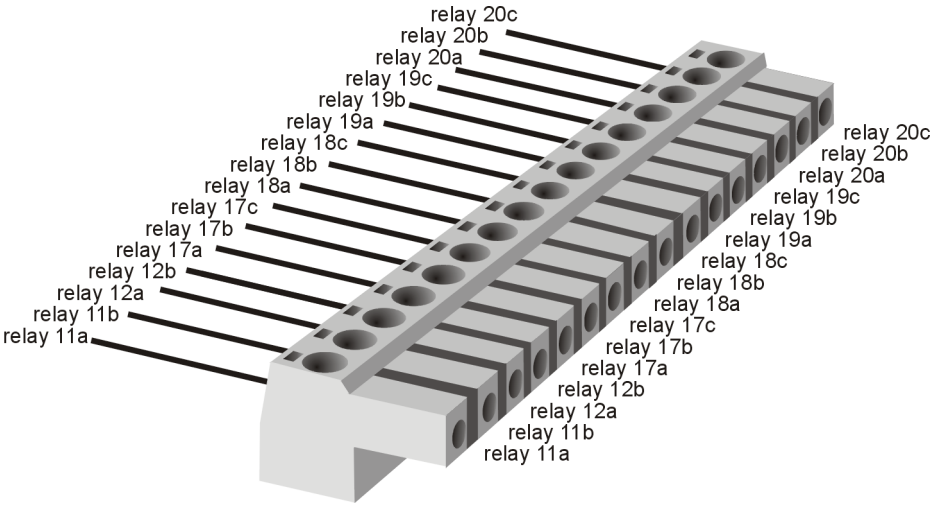

Figure **76:** Relay connector 2

10.4.3 Relay Connector 3

Plug type: Phoenix Contact MC 1,5/8-ST-3,81

Plug allocation (from top to bottom, viewed from the rear after installation):

Pin	Description
8	channel 1, normally open relay contact a
7	channel 1, normally open relay contact b
6	channel 2, normally open relay contact a
5	channel 2, normally open relay contact b
4	channel 3, normally open relay contact a
3	channel 3, normally open relay contact b
2	channel 4, normally open relay contact a
1	channel 4, normally open relay contact b



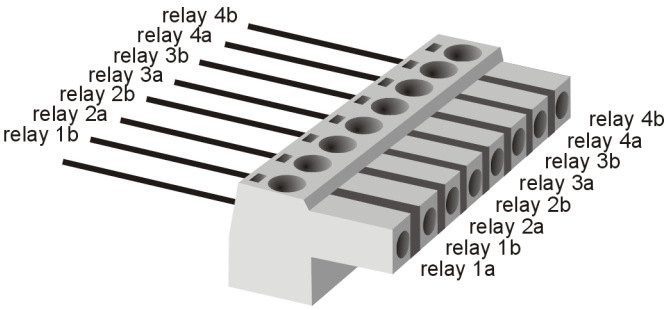

Figure **77:** Relay connector 3

10.4.4 Relay Connector 4

Plug type: Phoenix Contact MC 1,5/8-ST-3,81

Plug allocation (from top to bottom, viewed from the rear after installation):

Pin	Description
8	channel 5, normally open relay contact a
7	channel 5, normally open relay contact b
6	channel 6, normally open relay contact a
5	channel 6, normally open relay contact b
4	channel 7, normally open relay contact a
3	channel 7, normally open relay contact b
2	channel 8, normally open relay contact a
1	channel 8, normally open relay contact b



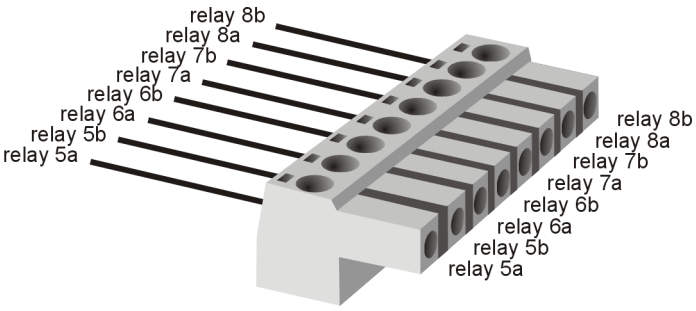

Figure **78:** Relay connector 4

10.4.5 Bus Bar Connector

Plug type: Phoenix Contact MC 1,5/2-ST-3,81

Plug allocation (from top to bottom, viewed from the rear after installation):

Pin	Description
2	Bus bar a
1	Bus bar b

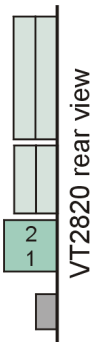

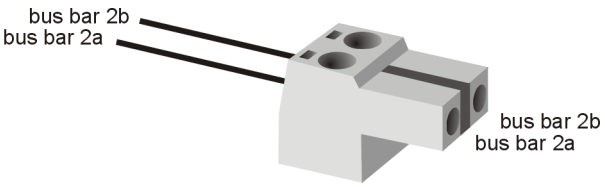

Figure **79:** Bus bar connector

10.5 Technical Data VT2820

10.5.1 General

Parameter	Min.	Typ.	Max.	Unit
Supply voltage (via the backplane)	10.8	12	13.2	V
Power consumption at 12.0 V > all relays off > 10 relays switched on > 30 relays switched on		 1.4 3.8 8.7		 W W W
Temperature range	0		+55	°C
Dimensions (length × width × depth)	300 x 173 x 36			mm
Total weight	approx. 790			g

10.5.2 Relays

Parameter	Min.	Typ.	Max.	Unit
Switching voltage (pin to pin)	-60		60	V
Carrying current (continuous current per channel, relay closed), time limited by fuse, see 10.5.3 Fuses		6	8	A
Switching current (current per channel) > at voltage ≤ ±24V > at voltage ≤ ±40V > at voltage ≤ ±60V			 6 2 0.5	 A A A
Contact resistance (pin to pin, at initial condition)			100	mΩ
Signal transmission capability (square wave)			1	MHz
Operate time (without bounce)		6	10	ms

Parameter	Min.	Typ.	Max.	Unit
Release time (without bounce)		3	5	ms
Frequency of operation (load 8A / 24VDC)			0.17	Hz
Mechanical endurance	$20x10^6$			Cycles
Electrical endurance (resistive load, 8A / 24VDC)	$50x10^3$			Cycles

10.5.3 Fuses

The trip time of the resettable fuses (polyfuse 7A) depends on the current and the ambient temperature (in the rack, near the fuses).

Parameter	Min.	Typ.	Max.	Unit
Carrying current (maximum continuous current per channel, relay closed, polyfuse does not trip) > at ambient temperature 25 °C > at ambient temperature 55 °C		 7 6		 A A

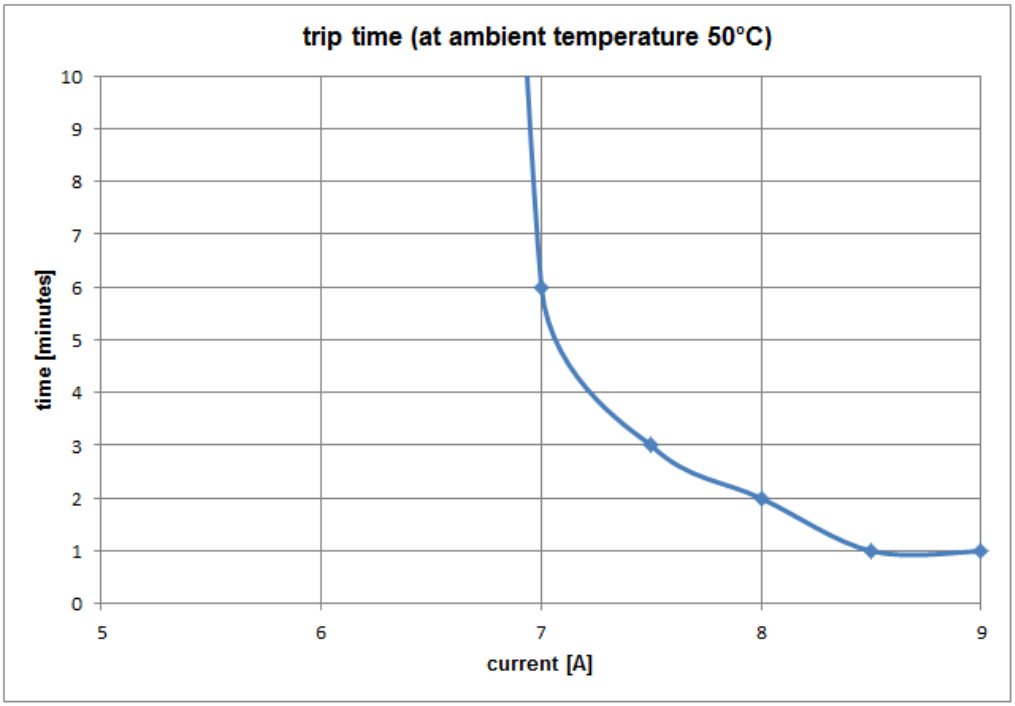

Figure **80:** The diagram shows the typical trip time of the polyfuse

11 VT2828 - Signal Switching Matrix Module

In this chapter you find the following information:

11.1 Purpose **168**
11.2 Installation **168**
11.3 Usage **168**
11.3.1 Basic Connections Scheme 168
11.3.2 Signal Path Switching 168
11.3.3 Exemplary Communication Signals 169
11.3.4 Displays 170
11.4 Connectors **171**
11.4.1 Column Connector 1 171
11.4.2 Column Connector 2 172
11.4.3 Row Connector 1 173
11.4.4 Row Connector 2 175
11.4.5 GND Connector 1 and 2 176
11.5 Technical Data VT2828 ..... **176**
11.5.1 General 176
11.5.2 Input Signals 177
11.5.3 Relays 177

11.1 Purpose

The VT2828 provides a differential switch matrix with 8 differential rows and 16 differential columns. Each node of the matrix consists of a double-pole signal relay. The matrix can be used to switch various signal paths in a test system, including differential signals. To create a reference plane for high-speed signals a GND connector is also available.

11.2 Installation

Please follow the general installation instructions in chapter 2.1.2 Modules.

11.3 Usage

11.3.1 Basic Connections Scheme

The plug connectors located above the backplane at the rear of the module can be used for the following connections:

- **Column connection**

  The matrix of the VT2828 has 16 differential columns which can be connected here. One column can be switched to one or several other rows or columns. The positive and negative parts (P and N pins) of the matrix cannot be connected via relay.
- **Row connection**

  The matrix of the VT2828 has 8 differential rows which can be connected here. One row can be switched to one or several other rows or columns. The positive and negative parts (P and N pins) of the matrix cannot be connected via relay.
- **GND connection**

  The VT2828 provides a separate GND connector to ensure signal quality for high speed signals.

11.3.2 Signal Path Switching

The VT2828 provides 128 double-pole relays on 8 differential rows and 16 differential columns. The contacts of these relays are connected to the terminals at the backside of the module, and they can be wired externally. Each row and each column consist of a separate N and P contact. The N and P connections are always switched simultaneously as this is done by one single double-pole relay.

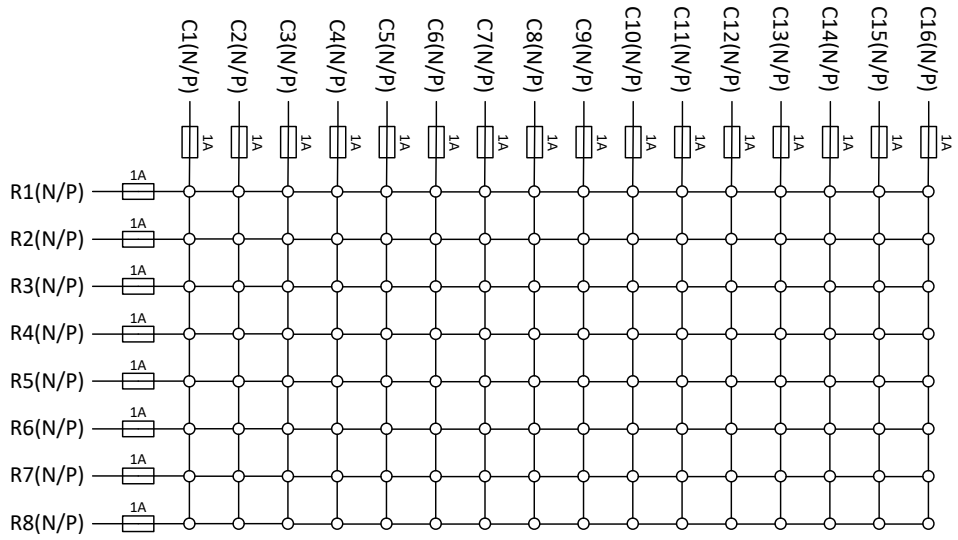

Figure **81:** Simplified schematic

Every node of the matrix consists of a double-pole relay, offering the possibility to switch single ended and differential signals:

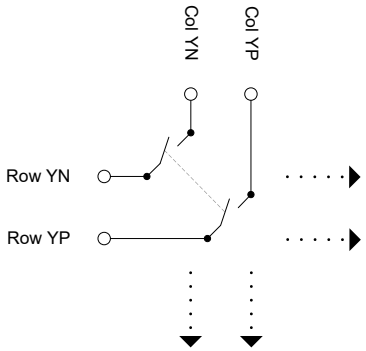

Figure **82:** Double-pole relay

The maximum current is limited by the resettable fuses (polyfuse 1 A). Currents near the defined maximum may be used only for short periods of time. If the current is too high or the fuses get too hot the current will be interrupted. When the fuse cooles down, it conducts current again. The trip time of the polyfuse depends on the current and the ambient temperature.

11.3.3 Exemplary Communication Signals

The VT2828 can be used for various single ended or differential signals. The module was successfully qualified with the following exemplary communication signals:

- LIN
- CAN and CAN FD (up to 8 MBaud)
- FlexRay (up to 10 MBaud)
- 10Base-T1S (stub lengths according to IEEE 802.3 cannot be guaranteed on all row and column combinations)

11.3.4 Displays

Row/Column Indication

The current state of the matrix is indicated on four displays on the front panel of the VT2828.

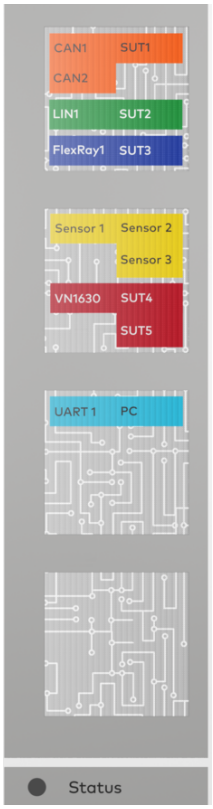

Figure **83:** Front panel displays with example configuration

Status LED

The status LED shows the overall state of the VT2828.

LED	Description
GREEN LED	Module is ready. Flashing indicates measurement is not active. A constant green light indicates measurement is running.
YELLOW LED	Module not ready.
RED LED	Error detected.

11.4 Connectors

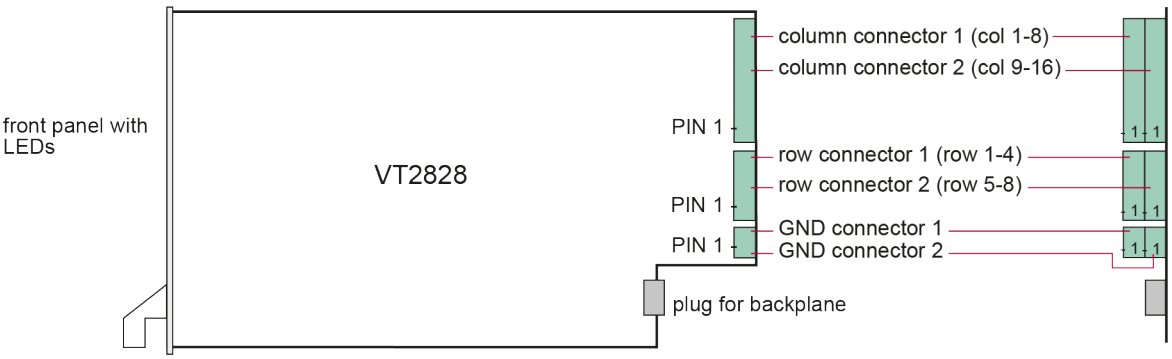

Figure **84:** Connectors

11.4.1 Column Connector 1

Plug type: Phoenix Contact MC 1,5/16-ST-3,81

Plug allocation (from top to bottom, viewed from the rear after installation):

Pin	Description
16	Column 1P
15	Column 1N
14	Column 2P
13	Column 2N
12	Column 3P
11	Column 3N
10	Column 4P
9	Column 4N
8	Column 5P
7	Column 5N
6	Column 6P
5	Column 6N
4	Column 7P

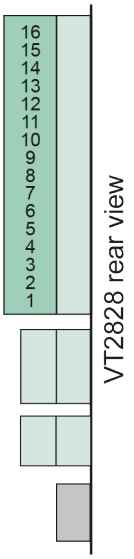

Pin	Description
3	Column 7N
2	Column 8P
1	Column 8N

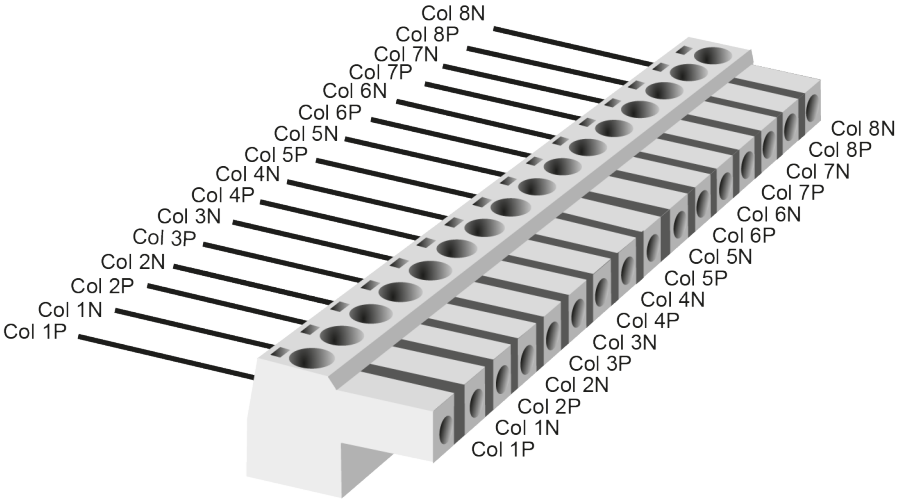

Figure **85:** Column connector 1

11.4.2 Column Connector 2

Plug type: Phoenix Contact MC 1,5/16-ST-3,81

Plug allocation (from top to bottom, viewed from the rear after installation):

Pin	Description
16	Column 9P
15	Column 9N
14	Column 10P
13	Column 10N
12	Column 11P
11	Column 11N
10	Column 12P

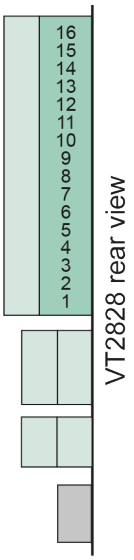

Pin	Description
9	Column 12N
8	Column 13P
7	Column 13N
6	Column 14P
5	Column 14N
4	Column 15P
3	Column 15N
2	Column 16P
1	Column 16N

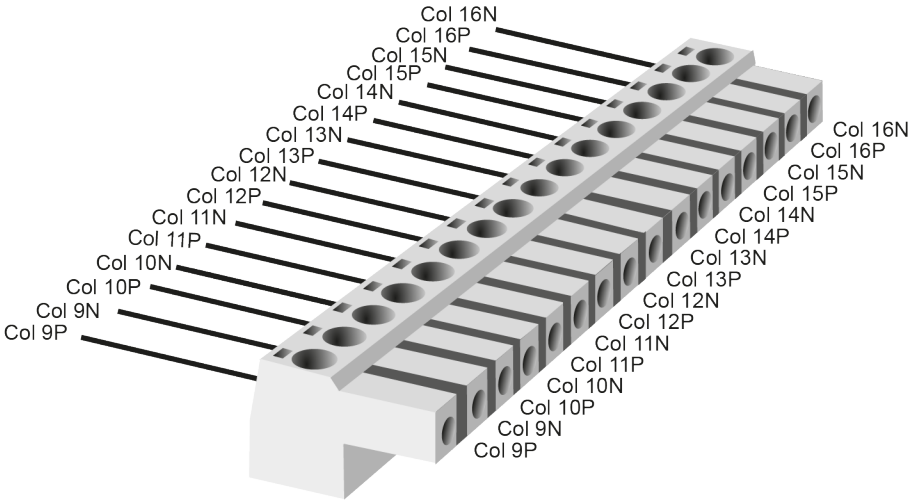

Figure **86:** Column connector 2

11.4.3 Row Connector 1

Plug type: Phoenix Contact MC 1,5/8-ST-3,81

Plug allocation (from top to bottom, viewed from the rear after installation):

Pin	Description
8	Row 1P
7	Row 1N
6	Row 2P
5	Row 2N
4	Row 3P
3	Row 3N
2	Row 4P
1	Row 4N

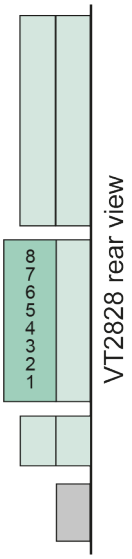

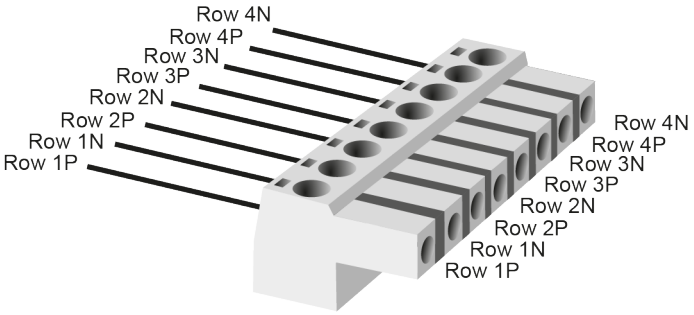

Figure **87:** Row connector 1

11.4.4 Row Connector 2

Plug type: Phoenix Contact MC 1,5/8-ST-3,81

Plug allocation (from top to bottom, viewed from the rear after installation):

Pin	Description
8	Row 5P
7	Row 5N
6	Row 6P
5	Row 6N
4	Row 7P
3	Row 7N
2	Row 8P
1	Row 8N

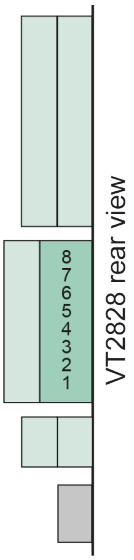

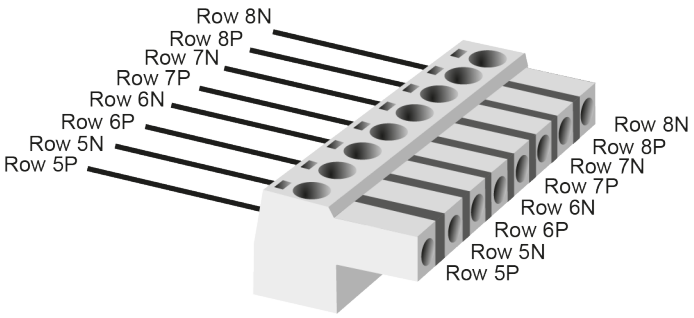

Figure **88:** Row connector 2

11.4.5 GND Connector 1 and 2

Plug type: Phoenix Contact MC 1,5/2-ST-3,81

Plug allocation (from top to bottom, viewed from the rear after installation):

Pin	Description
2	GND
1	GND

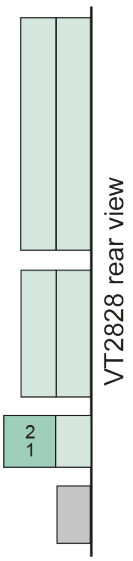

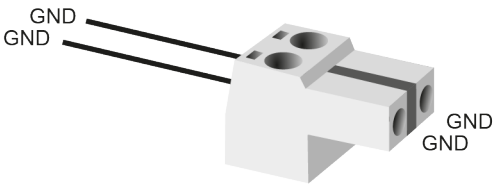

Figure **89:** GND connector

11.5 Technical Data VT2828

11.5.1 General

Parameter	Min.	Typ.	Max.	Unit
Supply voltage (via the backplane)	10.8	12	13.2	V
Power consumption at 12.0 V > all relays off > 23 relays switched on		 2.0 4.9		 W W
Temperature range	0		+55	°C
Dimensions (length × width × depth)	300 x 173 x 36			mm
Total weight	approx. 790			g

11.5.2 Input Signals

Parameter	Min.	Typ.	Max.	Unit
Input voltage (pin to pin)	-60		60	V
Carrying current (continuous current per channel, relay closed)			1	A
Resistance (pin to pin, at initial condition)	300		700	mΩ
Signal transmission capability (square wave)	10			MHz
Differential impedance (P, N to GND plane)		100		mΩ

11.5.3 Relays

Parameter	Min.	Typ.	Max.	Unit
Switching current (current per channel)			1	A
Operate time (without bounce)		1	3	ms
Release time (without bounce)		3	5	ms
Bounce time		1	5	ms
Mechanical endurance	$1x10^8$			Cycles
Electrical endurance (resistive load, 1A / 30VDC)	$50x10^5$			Cycles
Maximum number of activated relays			23	

12 VT2832 - Switch Matrix Module

In this chapter you find the following information:

12.1 Purpose **179**
12.2 Installation **179**
12.3 Usage **179**
12.3.1 Basic Connection Scheme 179
12.3.2 Signal Path Switching 179
12.3.3 Measurement 180
12.3.4 Switching 181
12.3.5 Maximum Current 181
12.3.6 Displays 181
12.4 Connectors **182**
12.4.1 Column Connector 182
12.4.2 Row/Switch Connector 183
12.5 Technical Data VT2832 ..... **185**
12.5.1 General 185
12.5.2 Input Signals and Switches 185
12.5.3 Voltage Measurement 187
12.5.4 Current Measurement 187

12.1 Purpose

The VT2832 provides a 4 x 8 switching matrix and 4 additional simple switches for high currents. The voltage at each column and the current into each column can be measured. The matrix is based on solid state relay technology (SSR), which allows a fast, cyclic and wear-free switching also under load (“hot” switching).

The VT2832 provides several features:

- Switching of high currents in a matrix layout or with simple switches
- Usage as Fault Insertion Unit (FIU)
- Fast and cyclic switching for simulation of loose contact or bouncing of mechanical relays

12.2 Installation

Please follow the general installation instructions in chapter 2.1.2 Modules.

12.3 Usage

12.3.1 Basic Connection Scheme

The plug connectors that are arranged above the backplane on the back of the module can be used for the following connections:

- **Column connection**
  The matrix of the VT2832 has 8 columns which can be connected here. One column can be switched to one or several other rows or columns.
- **Row connection**
  The matrix of the VT2832 has 4 rows which can be connected here. One row can be switched to one or several other rows or columns.
- **Switch connection**
  The VT2832 provides also a simple switch functionality. In this case loads which are connected between these connectors and the column connectors can be switched. For a higher current carrying capability it is also possible to use switches in parallel.

12.3.2 Signal Path Switching



NOTICE!

Due to the high parasitic capacities of the used solid state switches it is not possible to switch signals which have data rates above several 10 kHz.

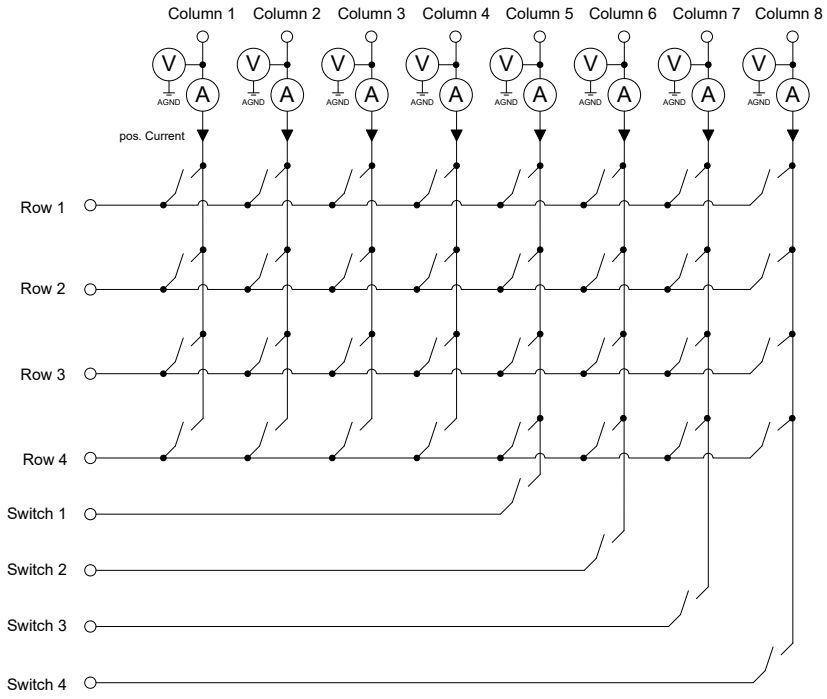

Figure **90:** Switching options of the VT2832

12.3.3 Measurement

Voltage Measurement

The VT2832 measures the voltages at the columns continuously, prepares the results, and returns the corresponding momentary values in CANoe.

The measuring range is from -60...60 V.

Current Measurement

The current into the columns is obtained by measuring the voltage drop across a very low-value resistor (shunt).

For the current measurement, the measurement data are prepared in the same way as for the voltage measurement. The momentary values are available in CANoe.

Currents between +/-16 A can be measured in a single range. There is no measurement range switching.

12.3.4 Switching

PWM Switching

The VT2832 provides not only the possibility of static switching. Cyclic switching by defining the PWM parameters frequency and duty cycle is also possible. For more detailed information on this, refer to the CANoe help.

Bitstream Switching

For arbitrary switching also a bitstream can be downloaded to the VT2832. For more detailed information on this, refer to the CANoe help.

12.3.5 Maximum Current

The maximum switching and carrying current for a single connection is 16A. For a higher current switching and carrying capability, switches can be used in parallel. This is possible because switches with SSR technology are used.

12.3.6 Displays

Row/column Indication

The current state of the matrix (signal is switched to corresponding row or column) is indicated by LEDs on the front panel.

LED	Description
Row	Lights up when at least one switch is active in this row.
Column	Lights up when at least one switch is active in this column.

Voltage Measurement

The columns also have a display indicating when a voltage at the corresponding column is measured.

LED	Description
Voltage	Lights up when voltage is above 3 V or below -3 V.

Current measurement

The columns also have a display indicating when a current into the corresponding column is measured.

LED	Description
Current	Lights up when the current is above 50 mA or below -50 mA.

Error Messages

The following errors are displayed:

> The row indication LED blinks when an overcurrent is detected in the respective row. In addition, the measurement is stopped in CANoe.
> The current LED of the respective column blinks when an overcurrent is detected in this column. In addition, the measurement is stopped in CANoe.
> The voltage and current LEDs of the respective column are blinking when a communication error of the measurement device is detected in this column. In addition, the measurement is stopped in CANoe.
> The column indication, voltage and current LEDs of the respective column are blinking when an overtemperature is detected in this column. In addition, the measurement is stopped in CANoe.
> All LEDs are blinking when another critical error is detected (e.g. board overtemperature). In addition, the measurement is stopped in CANoe.

Once the cause of the problem is eliminated, the error state can be reset by restarting the measurement in CANoe.

12.4 Connectors

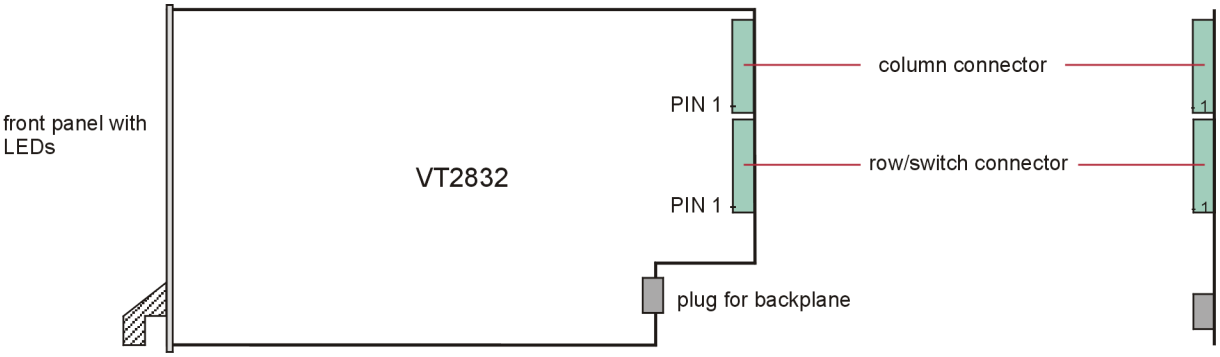

Figure **91:** Connectors

12.4.1 Column Connector

Plug type: Phoenix Contact MSTB 2,5 HC/8-ST-5,08

Plug allocation (from top to bottom, viewed from the rear after installation):

Pin	Description
8	column 1 (C1)
7	column 2 (C2)
6	column 3 (C3)
5	column 4 (C4)
4	column 5 (C5)

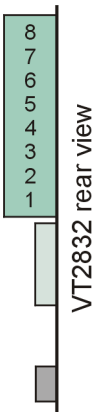

Pin	Description
3	column 6 (C6)
2	column 7 (C7)
1	column 8 (C8)

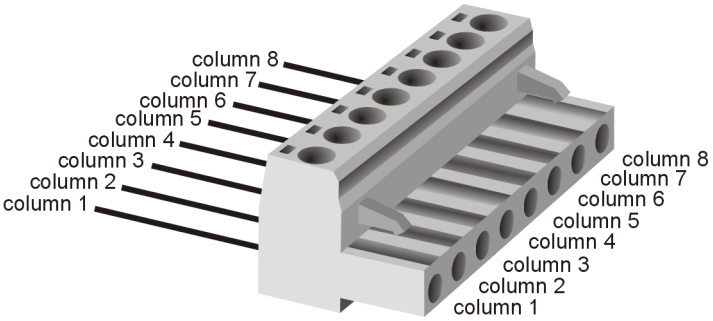

Figure **92:** Column connector

12.4.2 Row/Switch Connector

Plug type: Phoenix Contact MSTB 2,5 HC/8-ST-5,08

Plug allocation (from top to bottom, viewed from the rear after installation):

Pin	Description
8	row 1 (R1)
7	row 2 (R2)
6	row 3 (R3)
5	row 4 (R4)
4	switch 1 (S1)
3	switch 2 (S2)
2	switch 3 (S3)
1	switch 4 (S4)

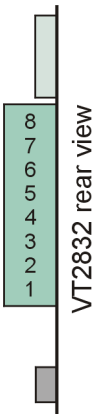

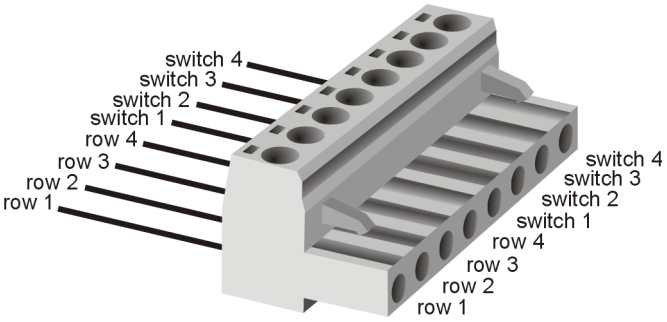

Figure **93:** Row/switch connector

12.5 Technical Data VT2832

12.5.1 General

Parameter	Min.	Typ.	Max.	Unit
Supply voltage (via the backplane)	10.8	12	13.2	V
Power consumption at 12.0 V > no operation > 8 nodes switched		 5.8 6.2		 W W
Temperature range	0		+55	°C
Dimensions (length × width × depth)	300 x 173 x 36			mm
Total weight	approx. 418			g

12.5.2 Input Signals and Switches

Parameter	Min.	Typ.	Max.	Unit
Input/switching voltage > row/column against DGND > row against column	 -60 -60		 +60 +60	 V V
Contact resistance (switch closed) > row to column			 20	 mΩ
Contact resistance (switch opened) > row to column > switches			 80 500	 MΩ MΩ
Carrying current > continuous current > peak current for ≤ 10 ms			 16 25	 A A
Switching current (resistive load)			16	A
Static switching (resistive load) > rise time > fall time			 500 500	 ns ns
PWM switching > frequency range > duty cycle range	 0.00002 1		 10 99	 kHz %

Parameter	Min.	Typ.	Max.	Unit
Bitstream switching > length of bitstream > interval between two values	 2 50		 4096 65000	 Bit µs
Signal transmission capability (square wave)			50	kHz

12.5.3 Voltage Measurement

Parameter	Min.	Typ.	Max.	Unit
Measurement range > column against DGND	 -60		 +60	 V
A/D converter > resolution > sample rate for raw data (per column)		 16 250		 Bits kSamples/s
With adjustment: Accuracy at 23±5°C, ±(% of value + offset)	 -(0.1+50 mV)		 +(0.1+50 mV)	

The accuracy of a measured voltage depends on two parts (% of value + offset). The first part (relative value) depends on the measured value; the second part (absolute value) is a fixed offset voltage.

As an example, if you measure a voltage of 10 V in the 60 V range, you get an accuracy of ±60 mV (1.0 % of 10 V + 50 mV).

12.5.4 Current Measurement

Parameter	Min.	Typ.	Max.	Unit
Measurement range	-16		+16	A
Common mode voltage	-60		60	V
Shunt resistance		3		mΩ
A/D converter > resolution > sample rate for raw data (per channel)		 16 250		 Bits kSamples/s
With adjustment: Accuracy at 23±5°C, ±(% of value + offset)	 -(0.1+50 mA)		 +(0.1+50 mA)	

13 VT2848 - General-Purpose Digital I/O Module

In this chapter you find the following information:

13.1 Purpose **189**
13.1.1 VT2848 189
13.1.2 VT2848 FPGA 189
13.2 Installation **189**
13.3 Usage **189**
13.3.1 Basic Connection Scheme 189
13.3.2 Measuring the Digital Input Signal 192
13.3.3 Output of a Digital Signal 192
13.3.4 Displays 193
13.4 Connectors **194**
13.4.1 I/O Connector 1 194
13.4.2 I/O Connector 2 196
13.4.3 I/O Connector 3 198
13.4.4 I/O Connector 4 199
13.4.5 Battery Voltage Connector 199
13.4.6 External Voltage Connector 200
13.5 Technical Data VT2848 ..... **200**
13.5.1 General 200
13.5.2 Digital Input 201
13.5.3 PWM Measurement 201
13.5.4 Digital Output 202
13.5.5 PWM Generation 203

13.1 Purpose

13.1.1 VT2848

Up to 48 digital inputs or outputs can be connected to the VT2848 module. Digital means that the signals have two states and, thus, two signal levels. Voltages for the output are connected to the module from the outside via V_{batt}/V_{ext} (high level) and ECU GND (low level). For this reason, the outputs can also be loaded with higher currents in order to switch relays, for example. The input voltage levels are chosen in such a way that signals of control units can be processed directly.

Inputs or outputs of control units can be connected to the VT2848. However, the module can also be used to measure or control other digital signals, such as are needed for control in a test bed, for example.

13.1.2 VT2848 FPGA

Basically, the VT2848 FPGA has the same hardware functionality and features as the VT2848 and is therefore used like the standard VT2848. Additionally, the VT2848 FPGA provides a second, dedicated FPGA, which has access to the VT System module's hardware and CANoe. It can be used for implementing custom functionality.

More information about the FPGA variants of the VT System modules can be found in chapter 26 User Programmable FPGA.

13.2 Installation

Please follow the general installation instructions in chapter 2.1.2 Modules.

13.3 Usage

13.3.1 Basic Connection Scheme

The plug connectors that are arranged above the backplane on the back of the module can be used for the following connections:

- **Connecting of inputs and outputs**
  The VT2848 has 48 identically structured digital input and output stages. These are each connected to one another in such a way that the current state of any channel can be measured back. Although the hardware of all 48 channels is identical PWM measurement is only available for channels 1 to 16 and PWM output is only available for channels 33 to 48.

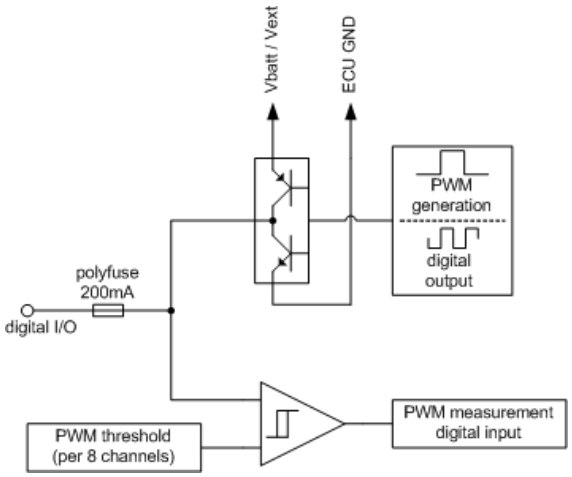

> **V_{batt}/V_{ext}**

The output stages are structured in such a way that the I/O pin of each channel will be switched to one of the two voltage levels V_{batt}/V_{ext} or ECU GND by means of transistors. The control unit supply voltage is typically connected to V_{batt}, while an additional second voltage can be connected to V_{ext}. V_{batt}/V_{ext} and ECU GND must always be connected, since otherwise the output stage is not supplied and no signal can be output. Moreover, it must also be taken into consideration that the connected supply can also supply the required current.
The following figure shows the distribution of the applied voltages V_{batt} and V_{ext} to the individual output stages:

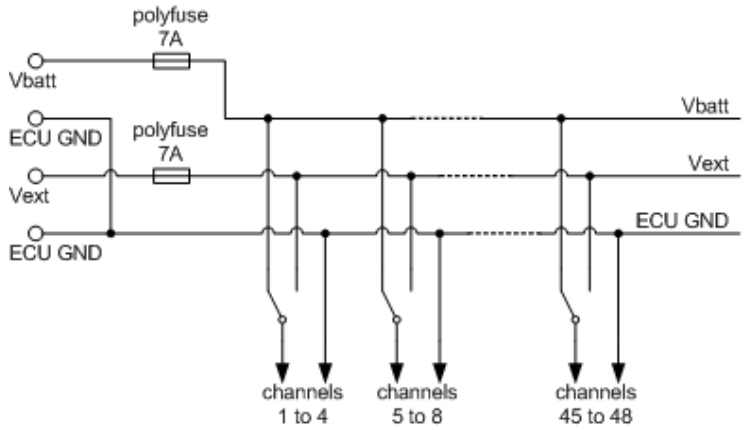

NOTICE!

> Applied voltage at V_{batt}/V_{ext} must not be higher than 60 V and polarity must not be swapped.
> If V_{batt}/V_{ext} and ECU GND are not connected, output stage will not work.

> **ECU GND**

The ground to which V_{batt}/V_{ext} is referenced is connected here. Even if no signal is output, this ground must be connected since the input is also referenced to this potential.
The cabling is done using Phoenix connectors, making it easy to switch them around. The test system can therefore be easily used for different devices, simply by connecting a different cable (connecting the VT module to the device to be tested).



NOTICE!

Always connect ECU GND to the module before switching on the VT System. Without ECU GND the module may cause an error ("**overvoltage**").

13.3.2 Measuring the Digital Input Signal

The digital data stream of each channel's signal line is captured. This happens regardless of whether the channel is used as in input or an output. An adjustable switching threshold is used to differentiate between the High and Low states. This switching threshold is set for groups of channels, i.e. for channels 1...8 and 9...16 collectively.

The signal is sampled every 50 µs. The bit stream is made available to CANoe.

The module can also measure PWM signals on channel 1...16. The frequency and duty cycle of the signal is determined and made available in CANoe.

13.3.3 Output of a Digital Signal

The VT2848 can output digital signals on each channel. In so doing, the high level can be set to V_{batt} or V_{ext} for a group of 4 channels. The low level is set to the externally connected ground.

On channels 33...48, it is also possible to output a PWM signal that is generated from the VT2848, as well to output a bit string that is downloaded to the module and executed without assistance. For more detailed information on this, refer to the CANoe online help.

The output stage can be operated in various modes:

- As a **high side switch**, the output is switched to V_{batt}/V_{ext}. Thus, for example, an output with **Open Collector** can be connected to the VT2848 and brought to a certain output level. The module supplies current in this operation mode.
- As a **low side switch**, the output is switched to GND. Thus, for example, the coil of a relay can be connected to the VT2848, and the switching of a relay can be controlled. The module consumes current in this operation mode.
- In **push-pull operation**, the output is switched to V_{batt}/V_{ext} (high) or to GND (low).

Due to the structure of the output stages, the maximum output frequency for a PWM output and the minimum interval between two values for a bit stream output are dependent on the applied voltage at V_{batt}/V_{ext}. The permitted working ranges can be taken from the technical data.

To protect the output stages, the measurement in CANoe is stopped when a PWM or bit stream parameter is set outside the permissible working range.



NOTICE!

If module is operated outside permitted operating range, it might be damaged. Therefore, care has to be taken to stay within this range.

13.3.4 Displays

LED

The current state of each channel is displayed by LEDs on the front panel.

LED	Description
LED of channel	Lights up when channel is active (both input and output activity).

Error Messages

The following errors are displayed:

- All LEDs flash when an overvoltage at V_{batt}/V_{ext} is detected or the polarity is reversed. In addition, the measurement in CANoe is stopped and all relays on the module are opened in order to deenergize V_{batt}/V_{ext}.
  Once the cause of the problem is eliminated, this state can be reset by restarting the measurement in CANoe.
- The respective LED of channel flashes when a value that is outside the permitted working range is set for a PWM signal output or a bit stream output. In addition, the measurement is stopped in CANoe.
  Once the cause of the problem is eliminated, this state can be reset by restarting the measurement in CANoe.

13.4 Connectors

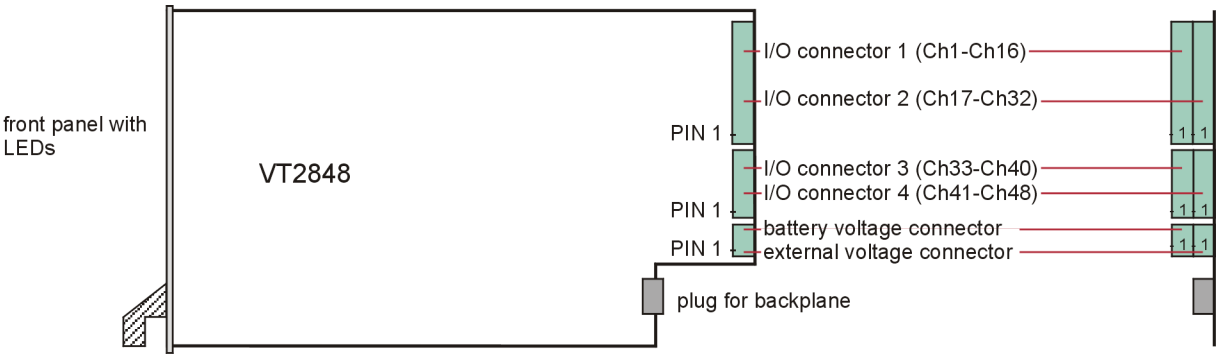

Figure **94:** Connectors

13.4.1 I/O Connector 1

Plug type: Phoenix Contact MC 1,5/16-ST-3,81

Plug allocation (from top to bottom, viewed from the rear after installation):

Pin	Description
16	channel 1, I/O pin
15	channel 2, I/O pin
14	channel 3, I/O pin
13	channel 4, I/O pin
12	channel 5, I/O pin
11	channel 6, I/O pin
10	channel 7, I/O pin
9	channel 8, I/O pin
8	channel 9, I/O pin
7	channel 10, I/O pin
6	channel 11, I/O pin
5	channel 12, I/O pin
4	channel 13, I/O pin



Pin	Description
3	channel 14, I/O pin
2	channel 15, I/O pin
1	channel 16, I/O pin

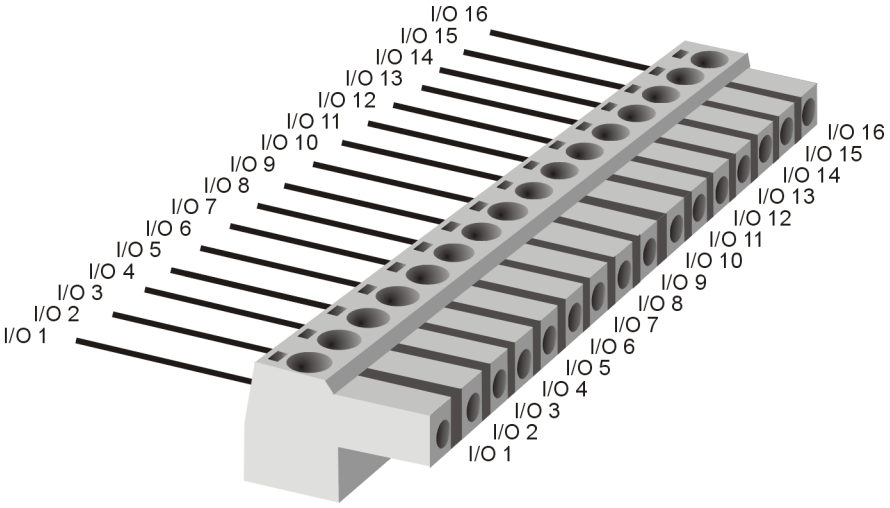

Figure **95:** I/O connector 1

13.4.2 I/O Connector 2

Plug type: Phoenix Contact MC 1,5/16-ST-3,81

Plug allocation (from top to bottom, viewed from the rear after installation):

Pin	Description
16	channel 17, I/O pin
15	channel 18, I/O pin
14	channel 19, I/O pin
13	channel 20, I/O pin
12	channel 21, I/O pin
11	channel 22, I/O pin
10	channel 23, I/O pin
9	channel 24, I/O pin
8	channel 25, I/O pin
7	channel 26, I/O pin
6	channel 27, I/O pin
5	channel 28, I/O pin
4	channel 29, I/O pin
3	channel 30, I/O pin
2	channel 31, I/O pin
1	channel 32, I/O pin



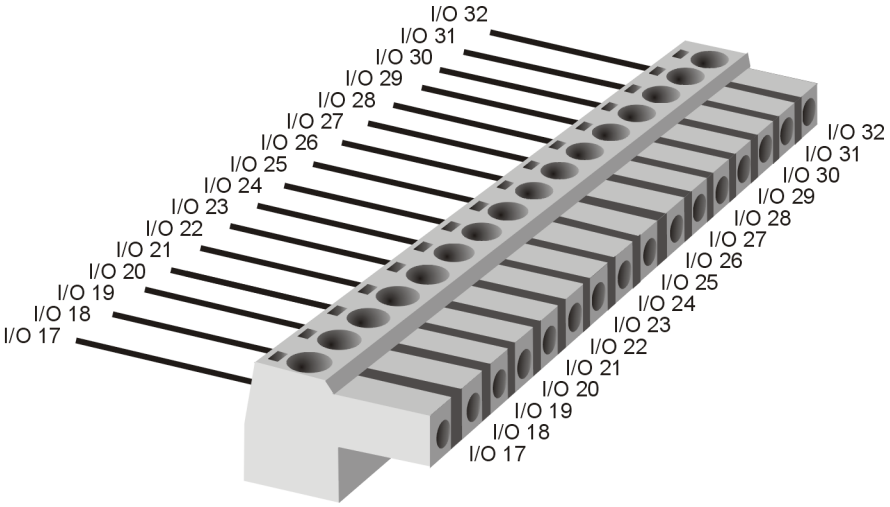

Figure **96:** I/O connector 2

13.4.3 I/O Connector 3

Plug type: Phoenix Contact MC 1,5/8-ST-3,81

Plug allocation (from top to bottom, viewed from the rear after installation):

Pin	Description
8	channel 33, I/O pin
7	channel 34, I/O pin
6	channel 35, I/O pin
5	channel 36, I/O pin
4	channel 37, I/O pin
3	channel 38, I/O pin
2	channel 39, I/O pin
1	channel 40, I/O pin

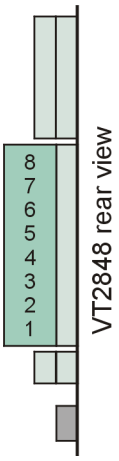

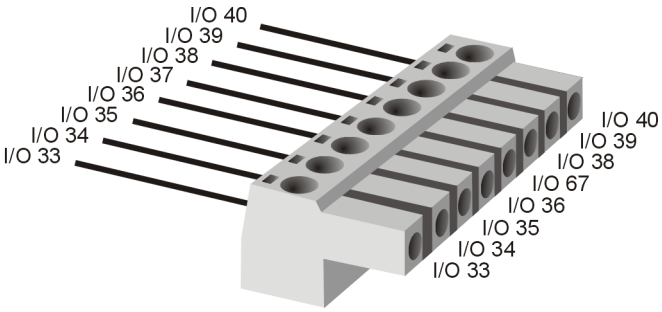

Figure **97:** I/O connector 3

13.4.4 I/O Connector 4

Plug type: Phoenix Contact MC 1,5/8-ST-3,81

Plug allocation (from top to bottom, viewed from the rear after installation):

Pin	Description
8	channel 41, I/O pin
7	channel 42, I/O pin
6	channel 43, I/O pin
5	channel 44, I/O pin
4	channel 45, I/O pin
3	channel 46, I/O pin
2	channel 47, I/O pin
1	channel 48, I/O pin



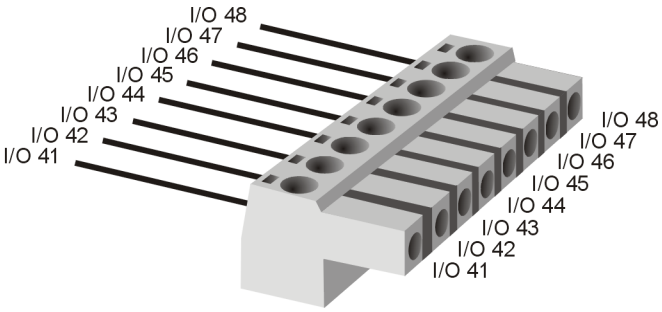

Figure **98:** I/O connector 4

13.4.5 Battery Voltage Connector

Plug type: Phoenix Contact MC 1,5/2-ST-3,81

Plug allocation (from top to bottom, viewed from the rear after installation):

Pin	Description
2	V_{batt}
1	ECU GND

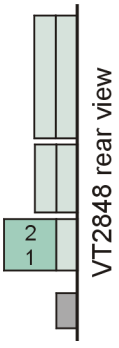

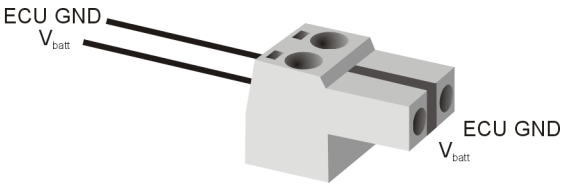

Figure **99:** Battery voltage connector

13.4.6 External Voltage Connector

Plug type: Phoenix Contact MC 1,5/2-ST-3,81

Plug allocation (from top to bottom, viewed from the rear after installation):

Pin	Description
2	V_{ext}
1	ECU GND

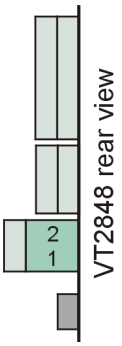

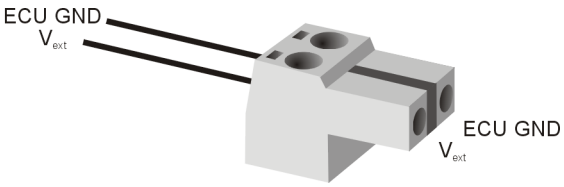

Figure **100:** External voltage connector

13.5 Technical Data VT2848

13.5.1 General

Parameter	Min.	Typ.	Max.	Unit
Supply voltage (via the backplane)	10.8	12	13.2	V
Power consumption at 12.0 V > no operation > all output channels connected to V_{ext}		 5.8 7.3		 W W
Temperature range	0		+55	°C
Dimensions (length × width × depth)	300 x 173 x 36			mm
Total weight	approx. 460			g

13.5.2 Digital Input

Parameter	Min.	Typ.	Max.	Unit
Input voltage > I/O pin against ECU GND	0		60	V
Impedance > I/O pin against ECU GND		200		kΩ
Threshold voltage	0		40	V
Threshold resolution		60		mV
Threshold hysteresis		0.2		V
Sampling interval		50		µs

13.5.3 PWM Measurement

Parameter	Min.	Typ.	Max.	Unit
PWM Frequency	0.00002		500	kHz
PWM frequency accuracy > at PWM frequency ≤ 500 kHz > at PWM frequency ≤ 100 kHz > at PWM frequency ≤ 10 kHz > at PWM frequency ≤ 1 kHz			 1 0.5 0.1 0.01	 % % % %
PWM duty cycle range > at PWM frequency ≤ 200 kHz > at PWM frequency ≤ 100 kHz > at PWM frequency ≤ 10 kHz > at PWM frequency ≤ 1 kHz			 80 90 99 99.9	 % % % %
PWM duty cycle tolerance (Input threshold level set to 50% of signal voltage) > at PWM frequency ≤ 200 kHz > at PWM frequency ≤ 100 kHz > at PWM frequency ≤ 10 kHz > at PWM frequency ≤ 1 kHz			 10 5 0.5 0.2	 % abs. % abs. % abs. % abs.

13.5.4 Digital Output

Parameter	Min.	Typ.	Max.	Unit
Supply voltage for output stages > V_{batt} against ECU GND > V_{ext} against ECU GND	 2 2		 60 60	 V V
Current into output stage supply pins > V_{batt} > V_{ext}			 7 7	 A A
Output voltage high level (I/O pin against ECU GND, at room temperature) > at source current ≤ 20 mA > at source current ≤ 100 mA > at source current ≤ 200 mA	 $V_{batt/ext}$ - 0.9 $V_{batt/ext}$ - 1.3 $V_{batt/ext}$ - 1.9			 V V V
Output voltage low level (I/O pin against ECU GND, at room temperature) > at sink current ≤ 20 mA > at sink current ≤ 100 mA > at sink current ≤ 200 mA			 0.2 0.4 0.8	 V V V
Output current (sink or source)	-200		200	mA
Length of bit stream	2		4096	Bit
Interval between two output values > at Vbatt/ext ≤ 60 V > at Vbatt/ext ≤ 48 V > at Vbatt/ext ≤ 36 V > at Vbatt/ext ≤ 24 V > at Vbatt/ext ≤ 12 V	 50 25 10 5 2.5		 65000 65000 65000 65000 65000	 µs µs µs µs µs
Rise Time (Push-Pull operation, I/O pin from 10% to 90%, resistive load 20mA) > at $V_{batt/ext}$ ≤ 60 V > at $V_{batt/ext}$ ≤ 36 V			 1 0.5	 µs µs
Fall Time (Push-Pull operation, I/O pin from 90% to 10%, resistive load 20mA) > at $V_{batt/ext}$ ≤ 60 V > at $V_{batt/ext}$ ≤ 36 V			 0.5 0.25	 µs µs

Due to the structure of the output stages, the minimum interval between two values for a bit stream output is dependent on the voltage setting at $V_{batt/ext}$.

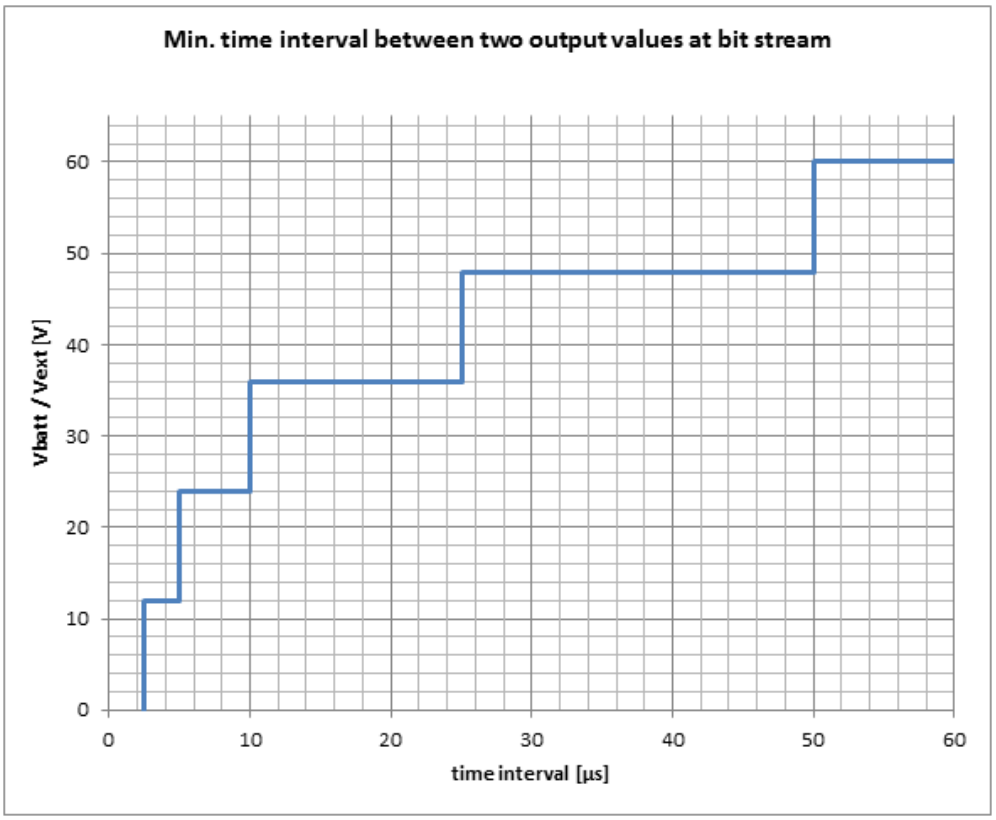

Figure **101:** Permitted working range

13.5.5 PWM Generation

Parameters are for **Push-Pull operation** with resistive load of 20 mA.

At higher resistive or capacitive loads, the precision of the PWM signal will decrease because the shape of the PWM signal will be influenced.

Parameter	Min.	Typ.	Max.	Unit
PWM frequency				
> at $V_{batt/ext}$ ≤ 60 V	0.00002		10	kHz
> at $V_{batt/ext}$ ≤ 48 V	0.00002		20	kHz
> at $V_{batt/ext}$ ≤ 36 V	0.00002		50	kHz
> at $V_{batt/ext}$ ≤ 24 V	0.00002		100	kHz
> at $V_{batt/ext}$ ≤ 12 V	0.00002		200	kHz

Parameter	Min.	Typ.	Max.	Unit
PWM frequency accuracy				
> at PWM frequency ≤ 200 kHz			2	%
> at PWM frequency ≤ 100 kHz			1	%
> at PWM frequency ≤ 10 kHz			0.1	%
> at PWM frequency ≤ 1 kHz			0.01	%
PWM duty cycle range				
> at PWM frequency ≤ 200 kHz	20		80	%
> at PWM frequency ≤ 100 kHz	10		90	%
> at PWM frequency ≤ 10 kHz	1		99	%
> at PWM frequency ≤ 1 kHz	0.1		99.9	%
PWM duty cycle tolerance				
> at PWM frequency ≤ 200 kHz			5	% abs.
> at PWM frequency ≤ 100 kHz			2	% abs.
> at PWM frequency ≤ 10 kHz			0.2	% abs.
> at PWM frequency ≤ 1 kHz			0.1	% abs

Due to the structure of the output stages, the **PWM frequency** setting is dependent on the voltage setting at $V_{batt/ext}$.

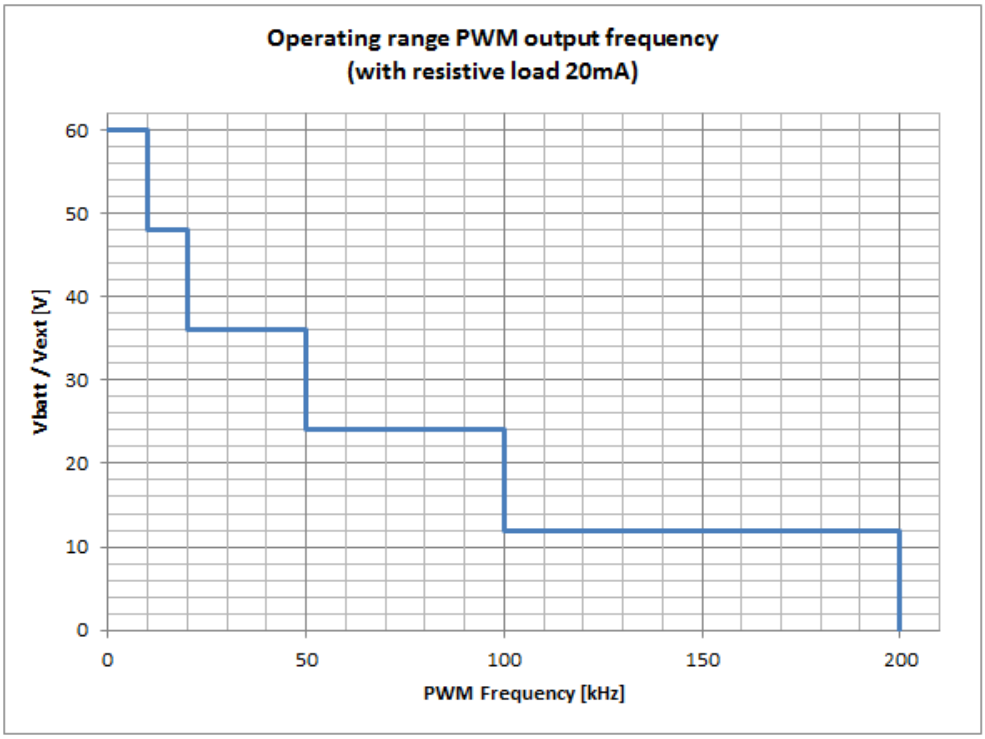

Figure **102:** Permitted working range of the PWM frequency

The **PWM duty cycle** is dependent on the PWM frequency setting. A useful operation within the following range is possible:

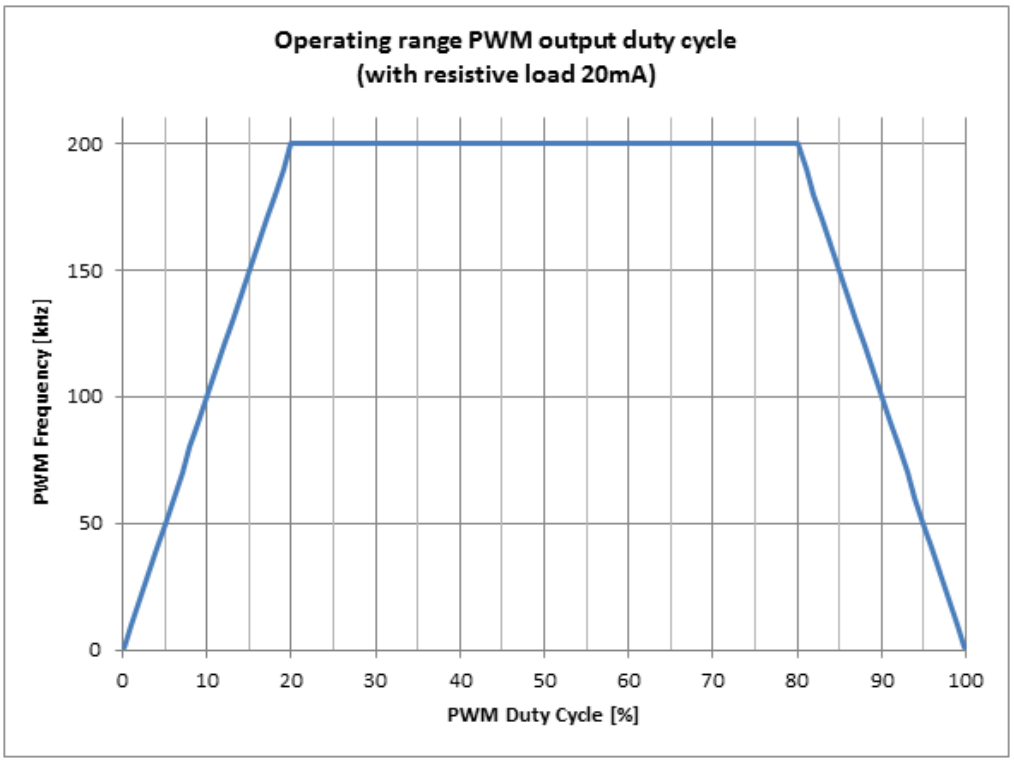

Figure **103:** Useful range of the PWM duty cycle

14 VT5201 - Smart Charging Module

In this chapter you find the following information:

14.1 Purpose **207**
14.2 Installation **207**
14.3 Usage **207**
14.3.1 Basic Connection Scheme 207
14.3.2 Signal Path Switching 209
14.3.3 Error Simulation 211
14.3.4 Displays 211
14.3.5 High Level Communication Piggies 213
14.4 Connectors **215**
14.4.1 Communication Connector 215
14.4.2 Measurement Connector 217
14.4.3 Bus Bar Connector 219
14.5 Technical Data VT5201 ..... **220**
14.5.1 General 220
14.5.2 Control Pilot PWM Stimulation 220
14.5.3 Control Pilot PWM Measurement 221
14.5.4 Proximity Contact Measurement 221
14.5.5 Resistance Values 221
14.5.6 Error Simulation 222
14.5.7 Line Communication 222

14.1 Purpose

The VT5201 is a dedicated module for testing the smart charge communication of electric vehicles. It is the replacement of the VT7970 and the VT7971. The module can simulate both communication partners, the electric vehicle supply equipment (EVSE) and the electric vehicle (EV) itself and offers the following features:

- Control pilot (CP) circuit for PWM communication according to IEC 61851-1 Annex A Electrically isolated from the remaining VT System.
- Power line communication (PLC) with various Piggies.
- Voltage measurement and stimulation of proximity contact (PP).
- Rise and fall time measurement of the CP signal.
- Several possibilities to simulate errors and vary component values.
- PWM signal will be generated and measured on the VT5201, but external measurement and stimulation is also possible.
- Low level communication for the Megawatt Charging System (MCS).

14.2 Installation

Please follow the general installation instructions in chapter 2.1.2 Modules.



Note

To simulate the high-level communication according to the Combined Charging System, a PLC Piggy needs to be installed on the VT5201. For low level communication only, the module can be used without a PLC Piggy.

14.3 Usage

14.3.1 Basic Connection Scheme

Communication Connection

For testing the smart charge communication the following signals of a charging plug can be connected:

- **Connecting of control pilot**
  For the control pilot signal there are two identical connections available. The electric vehicle supply equipment or the electric vehicle will be connected to the CP. CP-AUX can be used for measurement tasks or for legacy reasons.
- **Connecting of PE**
  With this connector the PE (protective earth) will be connected to the ground of the VT5201, which is electrically isolated from the remaining VT System.
- **Connecting of proximity contact**
  At this connector the proximity contact signal for detection of the possible charging current can be connected.

Measurement Connection

For stimulation and measurement of the PWM signal also external instruments can be connected.

- **Connecting external PWM stimulation (PWM_Stim)**
  At this connector for example a signal generator can be connected to create the PWM signal externally. A voltage between 0 V and 3.3 V at this connector results to a level of +/-15 V at the control pilot, whereat a voltage of 1.65 V corresponds to a CP level of 0 V.
- **Connecting external PWM measurement of CP (PWM_Meas)**
  At this connector for example a frequency counter can be connected to measure the PWM parameters of the control pilot signal. The CP signal is available with a level of max. +/-15 V.
- **Connecting external voltage measurement of CP (V_CP_Meas)**
  At this connector for example a voltmeter can be connected to measure the high and low voltage level of the Control Pilot signal. The CP signal is available with a level of max. +/-15 V.
- **Connecting external voltage measurement of PP (V_PP_Meas)**
  At this connector for example a voltmeter can be connected to measure the voltage of the proximity contact signal, which has a range from 0 V to 5 V.
- **Connecting the ground for external measurement and stimulation devices**
  With this connector the ground of the external measurement and stimulation devices can be connected to the ground on the VT5201. The ground of the application board is electrically isolated from the remaining VT System and is usually connected to protective earth (PE) of the charge plug.



NOTICE!

The VT5201 (signals, supply voltages and ground) is electrically isolated from the remaining VT System. So care has to be taken when connecting external measurement devices (e.g. oscilloscope) that no ground connection to the VT System is established via the power network.

It is recommended to use an isolation transformer.

Ethernet Connection

For the connection of the converted PLC signal to a CANoe product, a RJ45 connector is placed on the back of the VT5201.

14.3.2 Signal Path Switching

The VT5201 has circuits to simulate either the electric vehicle supply equipment (EVSE) or the electric vehicle (EV). The VT5201 offers dedicated modes to simulate an electric vehicle supply equipment (EVSE) or an electric vehicle (EV). To simulate other protocols and for legacy reasons the module also offers a special legacy mode with full control over all switches and resistor values.

The bus bar a and bus bar b are each protected by a 50 mA resettable polyfuse.

The following picture shows the schematic of the EVSE mode:

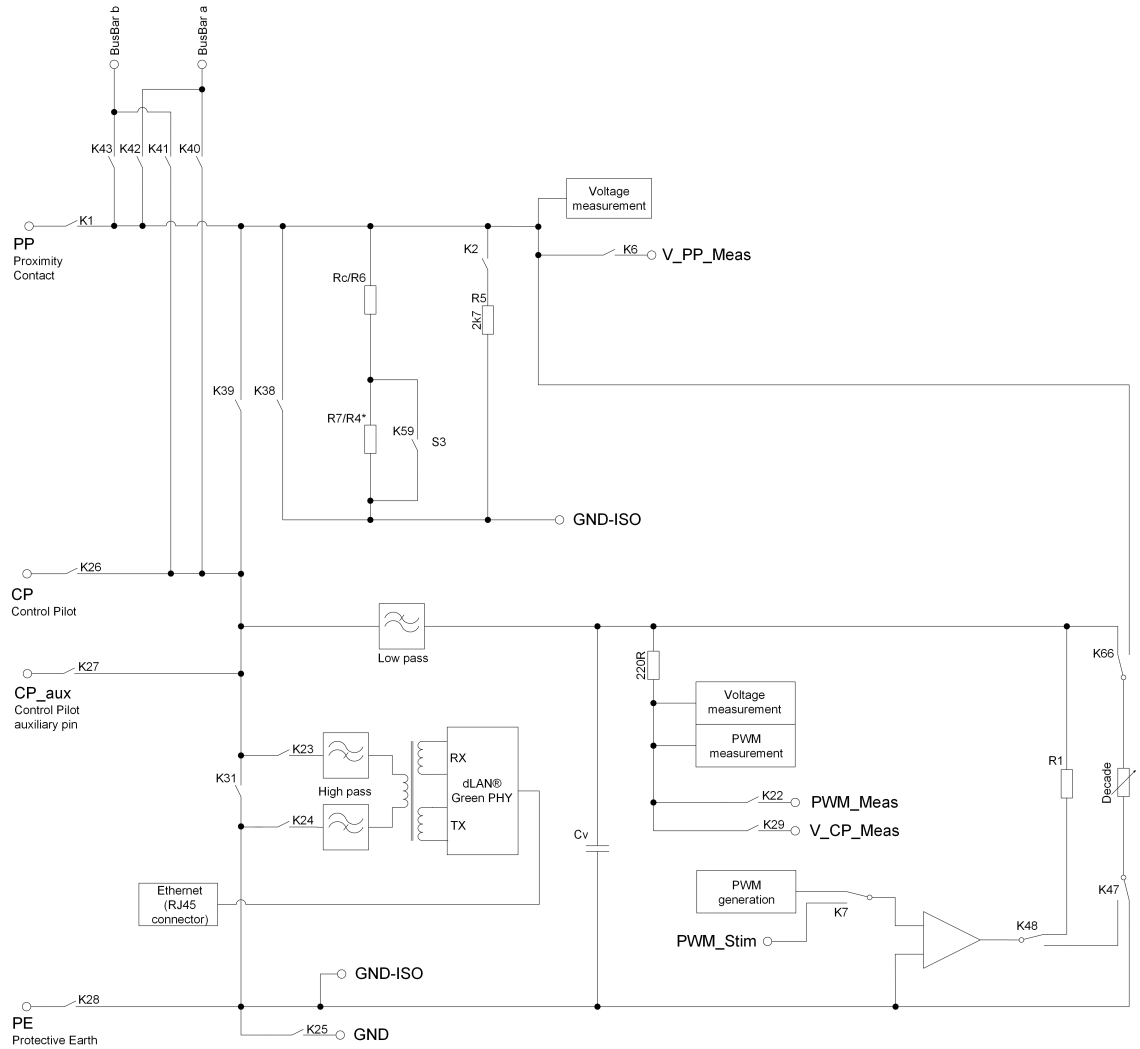

Figure **104:** Schematic of the EVSE mode

The following picture shows the schematic of the EV mode:

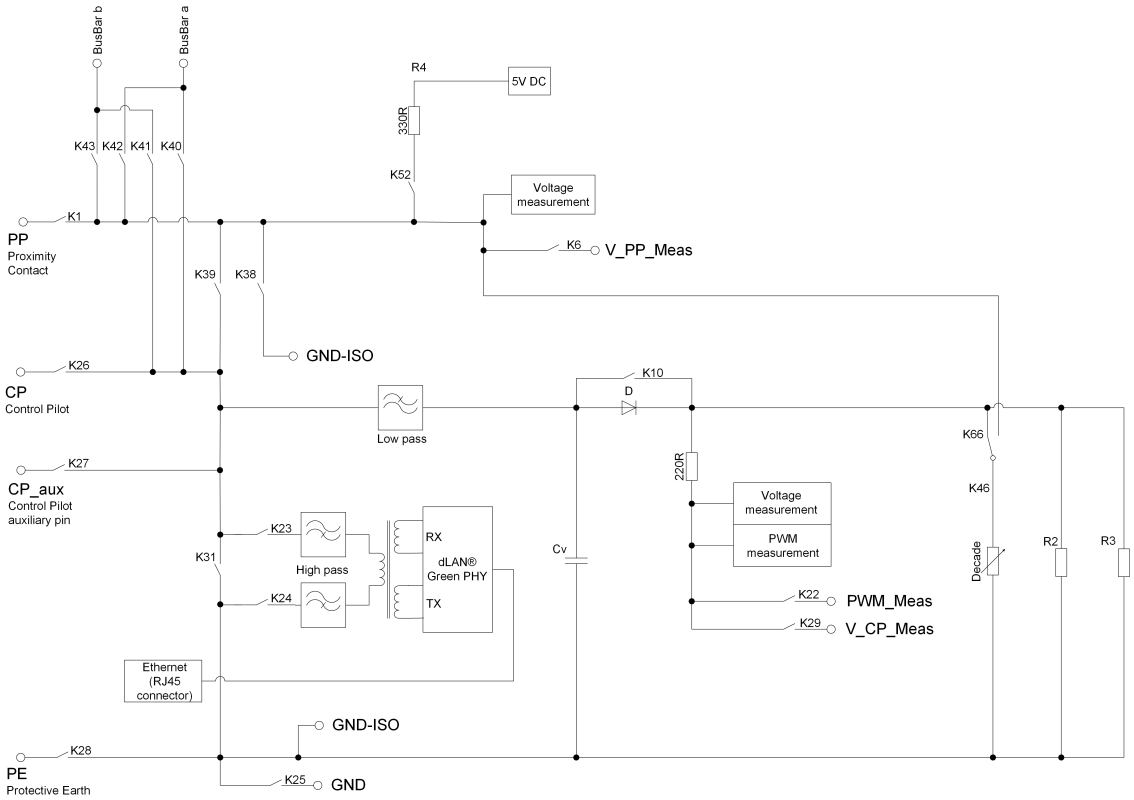

Figure **105:** Schematic of the EV mode

The following picture shows the schematic of the legacy mode:

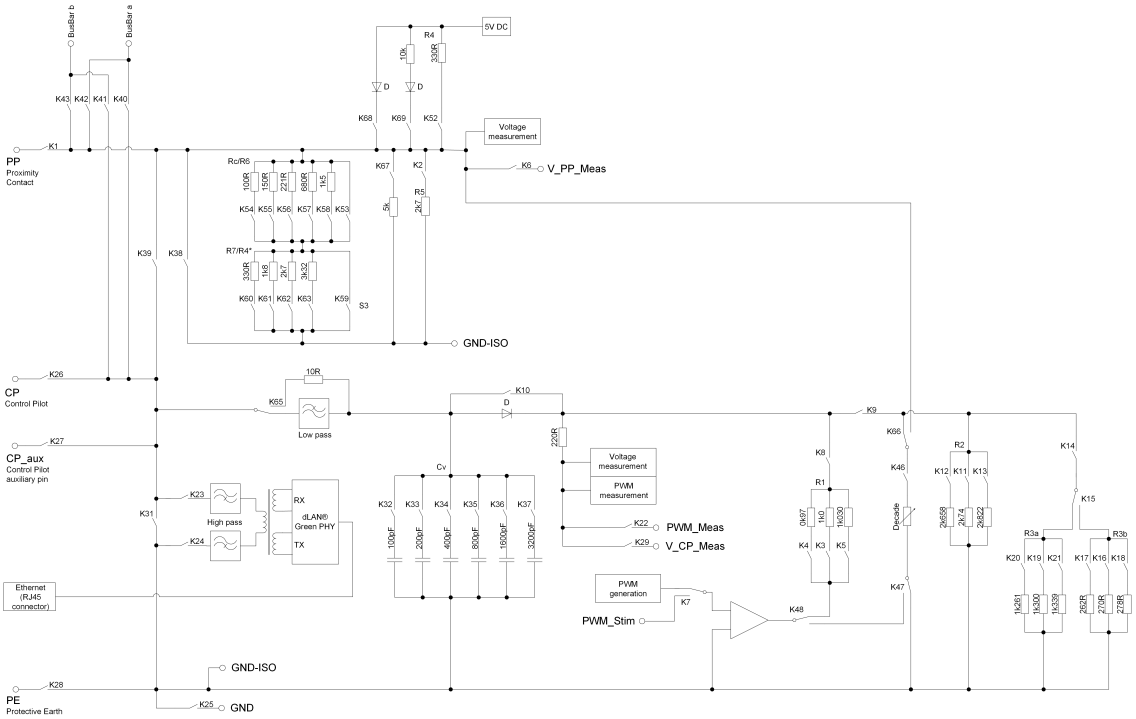

Figure **106:** Schematic of the legacy mode

14.3.3 Error Simulation

The module features various error simulation and parameter variation possibilities:

- Simulation of broken wire
- Simulation of short circuit between control pilot (CP) and protective earth (PE)
- Simulation of short circuit between proximity pilot (PP) and protective earth (PE)
- Variation of PWM frequency, PWM duty cycle and PWM high and low level variation of capacitive load
- Variation of resistors between minimum, maximum and nominal values
- Decade resistors to further manipulate either CP or PP resistor values

The variation range of the parameters and values can be found in section 14.5 Technical Data VT5201.

14.3.4 Displays

Simulation Mode LEDs

The simulation mode is indicated by LEDs on the front panel. The LEDs are linked to the state of the low level communication and do not represent the configuration of the PLC piggy or the configuration setting in the CANoe product.

LED	Description
EV	... lights up when all relays for EV simulation are set correctly.
EVSE	... lights up when all relays for EVSE simulation are set correctly.

Control Pilot LEDs

The current state of the Control Pilot (CP) pin is indicated by LEDs in the front panel.

LED	Description
PWM	...lights up if a PWM is generated or detected on the Control Pilot pin of the VT5201.
A	...lights up if state A is detected for the Control Pilot pin. Voltage level is +12 V. No EV is connected to the EVSE.
B	...lights up if state B is detected for the Control Pilot pin. Voltage high level of the PWM is +9 V. EV is connected to EVSE, but not ready for charging.

LED	Description
C	...lights up if state C is detected for the Control Pilot pin. Voltage high level of the PWM is +6 V. EV is connected to EVSE and ready for charging. No ventilation is required.
D	...lights up if state D is detected for the Control Pilot pin. Voltage high level of the PWM is +3 V. EV is connected to EVSE and ready for charging. Ventilation is required.
E	...lights up if state E is detected for the Control Pilot pin. Voltage level is +0 V. Electrical short to earth on the controller of the EVSE, no power supply.
F	...lights up if state F is detected for the Control Pilot pin. Voltage level is -12 V. EVSE is unavailable.

Proximity Pilot LED

The state of the Proximity Pilot is indicated by the LED in the front panel.

LED	Description
Plugged	...lights up if a connection is detected on the Proximity Pilot pin.

High Level Com. LEDs

The state of the high-level communication is indicated by LEDs in the front panel.

LED	Description
Act.	...lights up if there is activity on the high-level communication bus.
MCS	...reserved for the high-level communication of the Megawatt Charging System (MCS).

ETH LEDs

The state of the Ethernet connection of the high-level communication piggy is indicated by LEDs in the front panel.

Depending on the used high level communication piggy the behavior of the ETH LEDs might differ. Please check the description of the used piggy.

LED	Description
Act.	...lights up if a link is detected and is blinking if data traffic is active.
Speed	...lights up if an Ethernet connection with 100 Mbit/s is established.

Fault Injection LEDs

The current state of the fault injection capabilities of the VT5201 is indicated by LEDs in the front panel.

LED	Description
EVShort	...lights up if one of the short circuit relays is active (K31, K38 or K39).
EOpen	...lights up if one of the open relays is not active (K1, K26, K27 or K28).
Res./Cap.	...lights up if a non-nominal value for a resistor or the additional variable capacitor is active.
Busbar	...lights up if one of the busbar relays is active.

14.3.5 High Level Communication Piggies

The VT5201 supports various piggies for the high-level communication.



NOTICE!

The high level communication piggies are specific for use with the VT5201 and cannot be used with the VT7970 or VT7971.

14.3.5.1 QCA7000

The QCA7000 piggy uses the Qualcomm QCA7000 chipset to offer high level communication according to HomePlug GreenPhy specifications. This can be used for smart charging communications according to IEC 61851.

14.3.5.2 QCA7006AQ

The QCA7006AQ piggy uses the Qualcomm QCA7006AQ chipset to offer high level communication according to HomePlug GreenPhy specifications. This can be used for smart charging communications according to IEC 61851.

14.3.5.3 CG5317

The CG5317 piggy uses the Lumissil IS32CG5317 chipset to offer high level communication according to HomePlug GreenPhy specifications. This can be used for smart charging communications according to IEC 61851.

14.3.5.4 MSE1021

The MES1021 piggy uses the Vertexcom MSE1021 chipset to offer high level communication according to HomePlug GreenPhy specifications. This can be used for smart charging communications according to IEC 61851.

14.4 Connectors

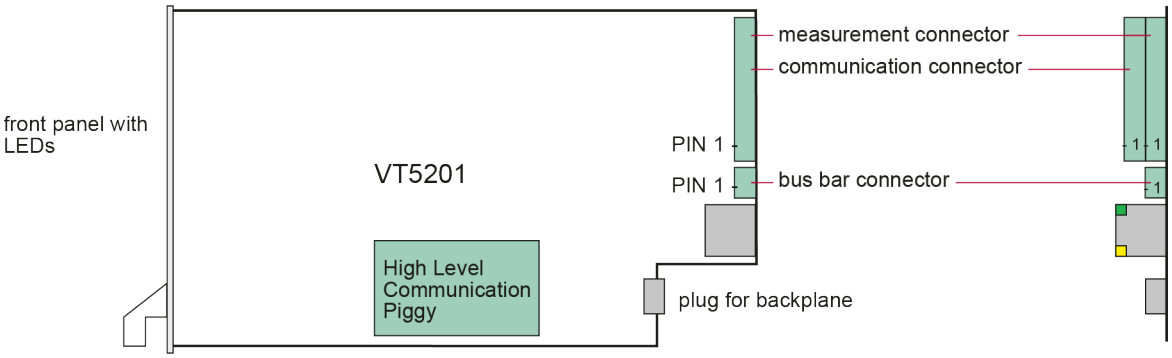

Figure **107:** Connectors

14.4.1 Communication Connector

Plug type: Phoenix Contact MC 1,5/16-ST-3,81

Plug allocation (from top to bottom, viewed from the rear after installation):

Pin	Description
16	CP, Control Pilot
15	PE, Protective Earth
14	CP_Aux, Auxiliary Control Pilot
13	PP, Proximity Contact
12	N.C.
11	N.C.
10	reserved
9	reserved
8	N.C.
7	N.C.
6	N.C.
5	N.C.
4	N.C.

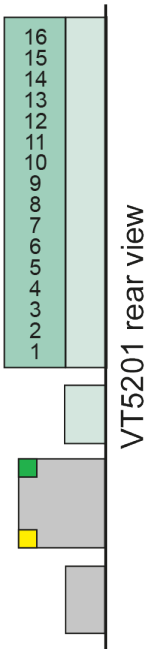

Pin	Description
3	N.C.
2	reserved
1	reserved

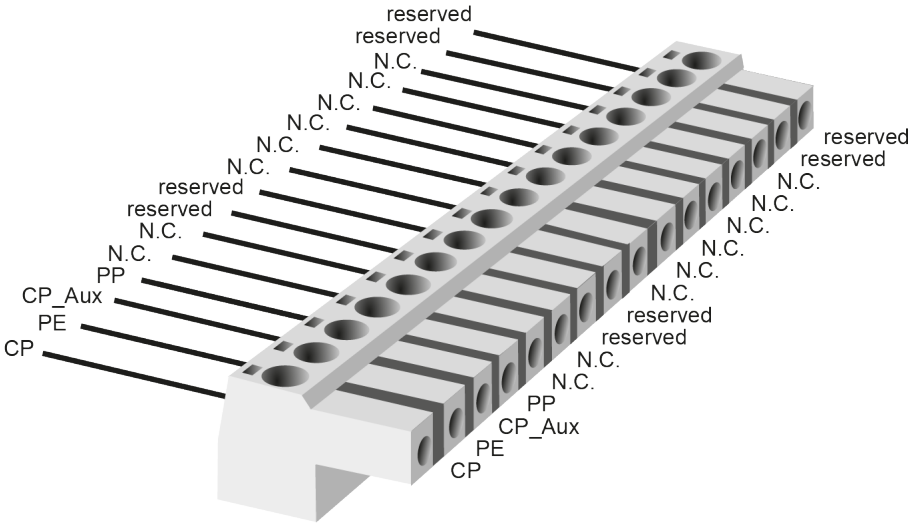

Figure **108:** Communication Connector

14.4.2 Measurement Connector

Plug type: Phoenix Contact MC 1,5/16-ST-3,81

Plug allocation (from top to bottom, viewed from the rear after installation):

Pin	Description
16	PWM_Stim
15	PWM_Meas
14	V_CP_Meas
13	V_PP_Meas
12	GND
11	N.C.
10	Sync+ (Zero Cross Detection)
9	Sync- (Zero Cross Detection)
8	N.C.
7	N.C.
6	N.C.
5	N.C.
4	N.C.
3	N.C.
2	reserved
1	reserved

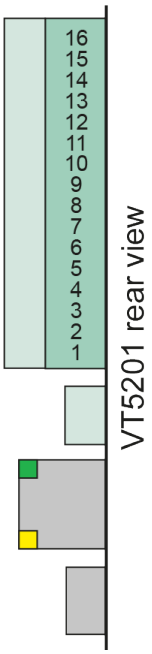

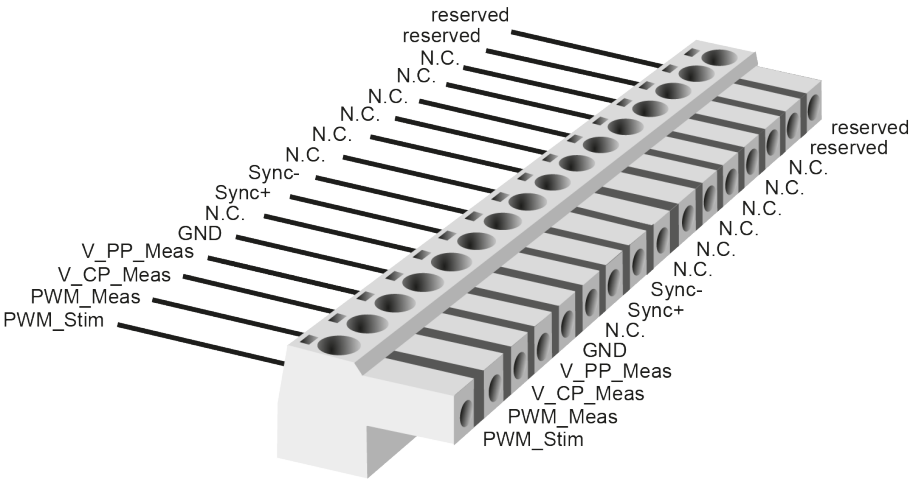

Figure **109:** Measurement Connector

14.4.3 Bus Bar Connector

Plug type: Phoenix Contact MC 1,5/2-ST-3,81

Plug allocation (from top to bottom, viewed from the rear after installation):

Pin	Description
2	Bus bar, pin a
1	Bus bar, pin b

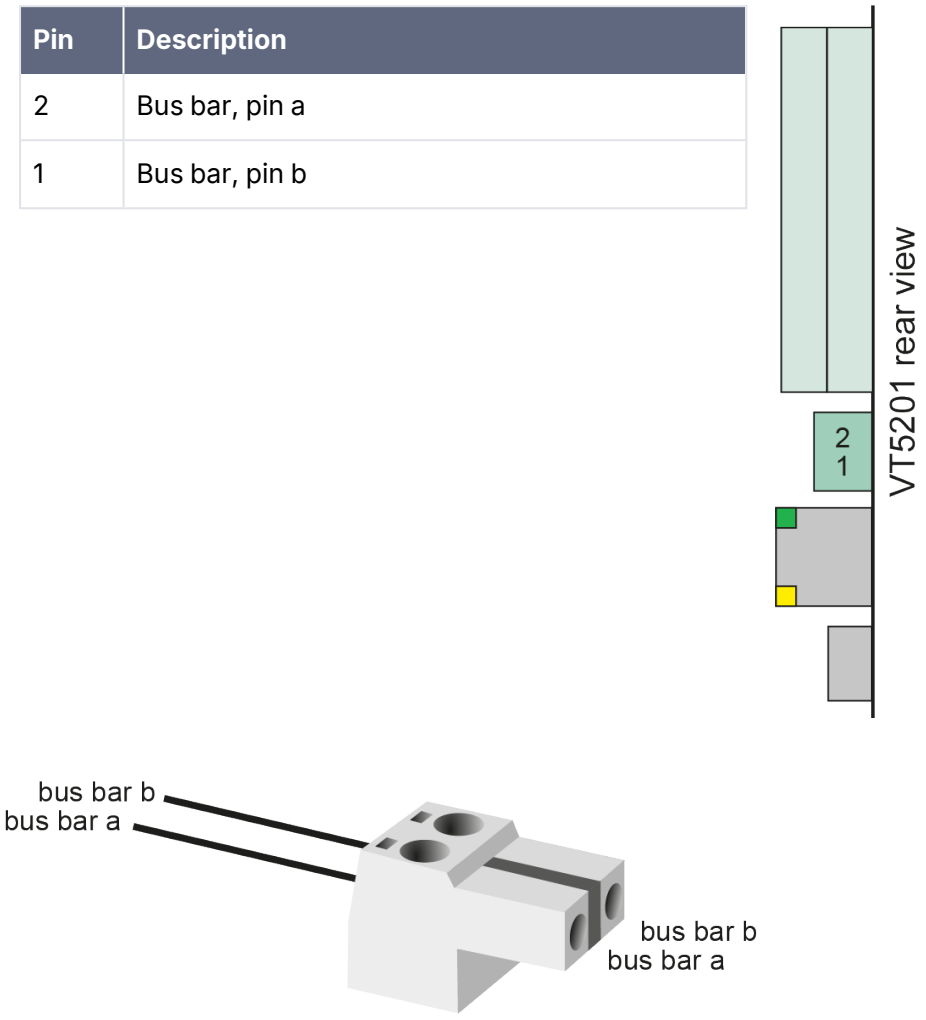

Figure **110:** Bus bar Connector

14.5 Technical Data VT5201

14.5.1 General

Parameter	Min.	Typ.	Max.	Unit
Supply voltage (via the backplane)	11.4	12	13.2	V
Power consumption at 12.0 V > idle > typical application		 6 10		 W W
Temperature range	0		+55	°C
Dimensions (length × width × depth)	300 x 173 x 36			mm
Total weight without application board	approx. 500			g

14.5.2 Control Pilot PWM Stimulation

Parameter	Min.	Typ.	Max.	Unit
Voltage > range > accuracy	 -15 -20		 +15 +20	 V mV
Signal rise time (±12 V, 10% to 90%) > no load, PLC coupler disconnected			 2.0	 µs
Signal fall time (±12 V, 90% to 10%) > no load, PLC coupler disconnected			 2.0	 µs
Frequency > range > accuracy	 100	 0.1	 10000	 Hz Hz
Duty cycle > range > accuracy	 1	 0.2	 99	 % %

14.5.3 Control Pilot PWM Measurement

Parameter	Min.	Typ.	Max.	Unit
Voltage > range > accuracy	 -15 -20		 +15 +20	 V mV
Frequency > range > accuracy	 100	 0.1	 10000	 Hz Hz
Duty cycle > range > accuracy	 1	 0.1	 99	 % %
Rise/fall time > range > accuracy	 0	 1	 30	 µs µs

14.5.4 Proximity Contact Measurement

Parameter	Min.	Typ.	Max.	Unit
Voltage > range > accuracy	 0 -10		 +5 +10	 V mV

14.5.5 Resistance Values

Parameter	Min.	Typ.	Max.	Unit
R1	0.97	1	1.03	kΩ
R2	2.658	2.7	2.822	kΩ
R3a	1.261	1.3	1.399	kΩ
R3b	0.262	0.270	0.278	kΩ
R4		2.7		kΩ
R5		0.33		kΩ

Parameter	Min.	Typ.	Max.	Unit
Rc / R6		0.1; 0.15; 0.22; 0.68 or 1.5		kΩ
R7 / R4*		0.33; 1.8; 2.7 or 3.3		kΩ
R variable	0.075		4.095	kΩ
R_{MCS} 5k		5		kΩ
R_{MCS} 10k		10		kΩ

14.5.6 Error Simulation

Parameter	Min.	Typ.	Max.	Unit
Capacitive load > range > accuracy	0	 100	6.3	 nF pF

14.5.7 Line Communication

Parameter	Min.	Typ.	Max.	Unit
Low pass filter PLC rejection		20		dB
PLC insertion loss > RX path (AttnRxEVSE/AttnRxEV) > TX path (AttnTxEVSE/AttnTxEV)		 7 7		 dB dB
PLC transformer turn ratio (PL:RX:TX)	1:1:1			

15 VT5838 – Multi-IO / E-Machine Module

In this chapter you find the following information:

15.1 Purpose **224**
15.2 Installation **224**
15.3 Usage **224**
15.3.1 Basic Connection Scheme 224
15.3.2 Voltage Measurement 226
15.3.3 Voltage Stimulation 226
15.3.4 Measuring Digital Input Signals 226
15.3.5 Output of Digital Signals 226
15.3.6 Displays 226
15.4 Connectors **227**
15.4.1 Voltage Measurement Connector 1 227
15.4.2 Voltage Measurement Connector 2 229
15.4.3 Voltage Stimulation Connector 1 230
15.4.4 Voltage Stimulation Connector 2 231
15.4.5 Digital I/O Connector 1 232
15.4.6 Digital I/O Connector 2 233
15.5 Technical Data VT5838 ..... **234**
15.5.1 General 234
15.5.2 Voltage Measurement 234
15.5.3 Voltage Stimulation 236
15.5.4 Digital Input 236
15.5.5 Digital Output 236
15.5.6 LVDS 238
15.5.7 RS422 238

15.1 Purpose

The VT5838 offers 8 differential analog voltage inputs, 14 analog voltage outputs and 16 digital digital channels which can either be input or output.

In addition, the VT5838 offers a RS422 Interface, a LVDS Interface, IBC+ and an Ethernet port.

The VT5838 always comes with an onboard User-FPGA and all Inputs, Outputs and interfaces are directly connected to this FPGA. Therefore, simulation models or control loops with very short reaction times can be implemented on the VT5838. The user FPGA is an Altera Cyclone V 5CGXFC9E6F31I7N.

15.2 Installation

Please follow the general installation instructions in chapter 2.1.2 Modules.

15.3 Usage

15.3.1 Basic Connection Scheme

The plug connectors that are arranged above the backplane on the back of the module can be used for the following connections:

> **Connection for differential voltage measurement**

Two pins per channel are available for the voltage measurement. The voltage to be measured is always connected to pin a, and the potential referred to by the voltage to pin b.

The analog inputs are galvanically isolated from the rest of the VT System in two groups. In the first group AGND1 is used for Channels 1-4, in the second group AGND2 is used for channels 5-8.

Therefore, it is mandatory to connect AGND1 if channels 1-4 are used and AGND2 if channels 5-8 are used.

The following picture shows the structure of the analog inputs 1-4.

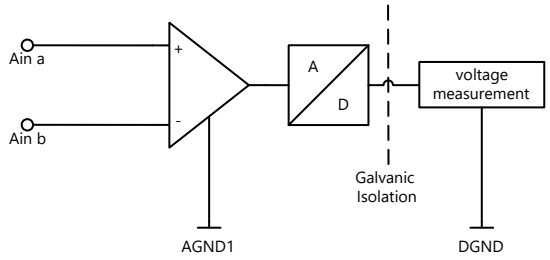

Figure **111:** Structure of analog input channels 1 - 8

> **Connection for voltage output**

The 14 analog output channels of the VT5838 are single ended and each channel uses a single pin on the voltage output connectors. The voltage output is referenced to AGND of the VT5838 which is connected to DGND of the VT System. AGND pins are also available on the voltage output connectors

The structure of output channels 1 - 14 is as follows:

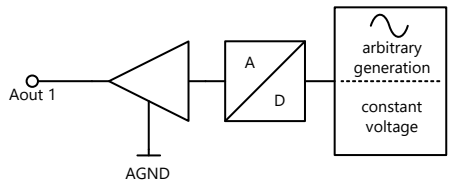

Aout 1 – Aout 14

Figure **112:** Structure of analog outputs channels 1 - 14

> Connection for digital signals

The voltage output at the digital I/O pins is referred to DGND.

The structure of output channels 1 - 4 is as follows:

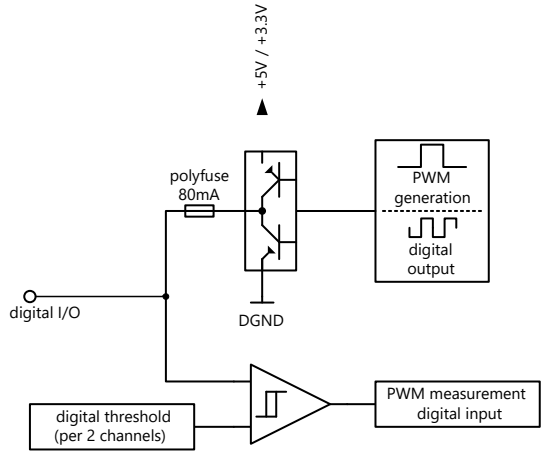

Figure **113:** Structure of digital channels

> LVDS Connections

For LVDS Connections two 2.54 mm IDC Pin Headers can be found on the VT5838. The connectors also offer 2.5 V and DGND of the VT System.

> RS422 Connections

For RS422 Connections two 2.54 mm IDC Pin Headers can be found on the VT5838. The connectors also offer 3.3 V and DGND of the VT System.

15.3.2 Voltage Measurement

The VT5838 offers eight differential analog input channels to measure Voltages up to +/- 60 V.

To achieve better accuracy, the default measuring range of +/-60 V can be reduced to +/-20 V or +/-5 V.

15.3.3 Voltage Stimulation

The output channels 1 to 8 offer an output range of +/- 15 V. The output channels 9 to 14 offer an output range of +/- 10 V. A voltage can be output referenced to AGND of the VT5838 which is connected to DGND of the VT System.

15.3.4 Measuring Digital Input Signals

The trigger levels for the digital inputs can be set in a range from + 12 V to – 12 V. Two channels always share the same trigger level. A digital glitch filter can be set to each channel in a range from 0 ns to 10000 ns.

15.3.5 Output of Digital Signals

Each digital Channel of the VT5838 can output a digital signal. The high level is either 3.3 V or 5 V for all channels together. The low level is always DGND of the VT System.

The Digital Output can operate in three different modes:

- As a high side switch, the output is switched to 3.3 V or 5 V. Thus, for example, an output with Open
  Collector can be connected to the VT5838. The module supplies current in this operation mode.
- As a low side switch, the output is switched to GND. The module consumes current in this operation mode.
- In push-pull operation, the output is actively switched to 3.3 V or 5 V (high) and to GND (low).

15.3.6 Displays

LED

The VT5838 offers 16 Bicolor LEDs on the front panel. These LEDs can be used by the customer via the User FPGA to show status information.

15.4 Connectors

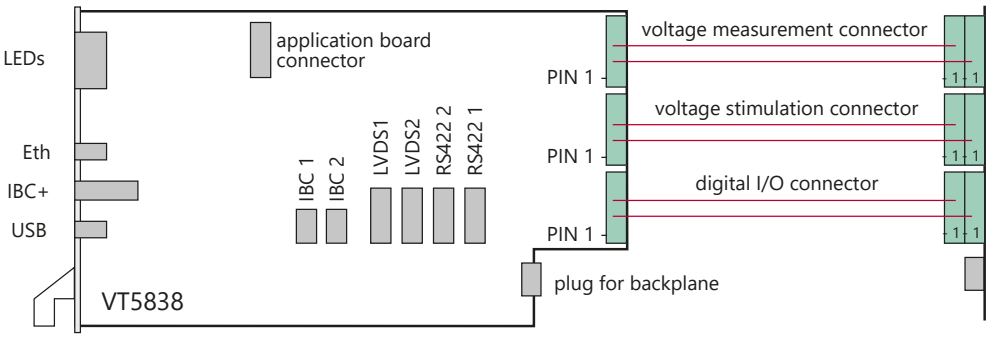

Figure **114:** Connectors

15.4.1 Voltage Measurement Connector 1

Plug type: Phoenix Contact MC 1,5/9-ST-3,81

Plug allocation (from top to bottom, viewed from the rear after installation):

Pin	Description
9	channel 1, voltage measurement, pin a
8	channel 1, voltage measurement, pin b
7	channel 2, voltage measurement, pin a
6	channel 2, voltage measurement, pin b
5	GND1
4	channel 3, voltage measurement, pin a
3	channel 3, voltage measurement, pin b
2	channel 4, voltage measurement, pin a
1	channel 4, voltage measurement, pin b

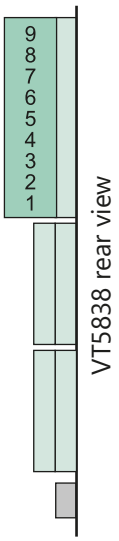

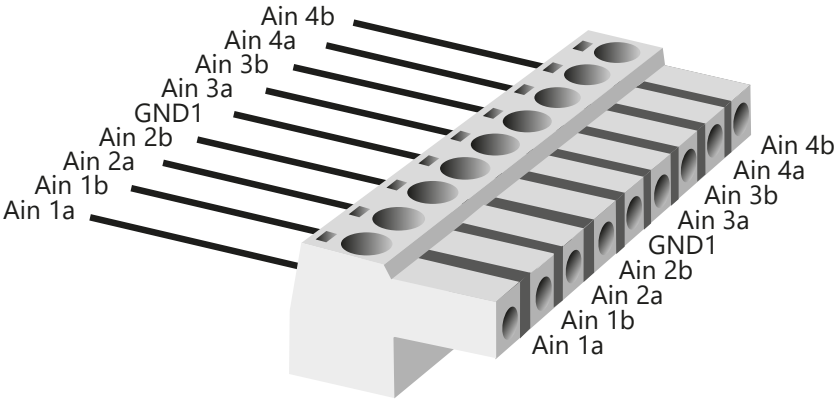

Figure **115:** Voltage Measurement Connector 1

15.4.2 Voltage Measurement Connector 2

Plug type: Phoenix Contact MC 1,5/9-ST-3,81

Plug allocation (from top to bottom, viewed from the rear after installation):

Pin	Description
9	channel 5, voltage measurement, pin a
8	channel 5, voltage measurement, pin b
7	channel 6, voltage measurement, pin a
6	channel 6, voltage measurement, pin b
5	GND2
4	channel 7, voltage measurement, pin a
3	channel 7, voltage measurement, pin b
2	channel 8, voltage measurement, pin a
1	channel 8, voltage measurement, pin b

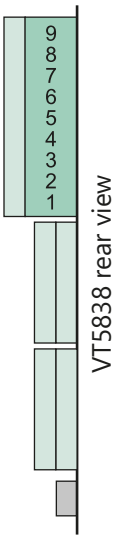

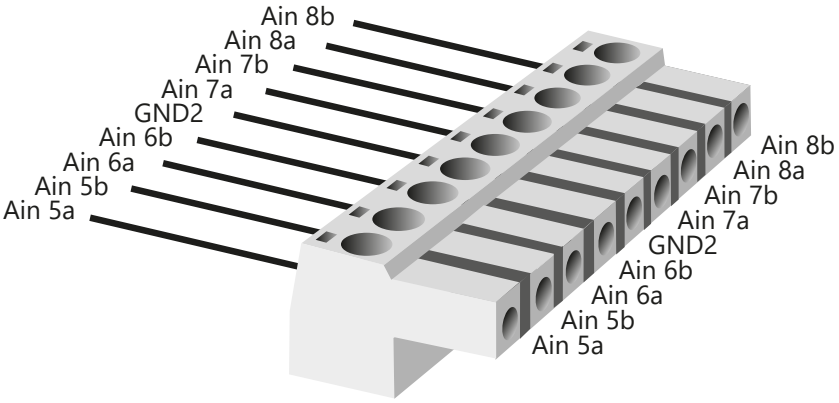

Figure **116:** Voltage Measurement Connector 2

15.4.3 Voltage Stimulation Connector 1

Plug type: Phoenix Contact MC 1,5/8-ST-3,81

Plug allocation (from top to bottom, viewed from the rear after installation):

Pin	Description
8	channel 1, voltage stimulation
7	channel 2, voltage stimulation
6	channel 3, voltage stimulation
5	channel 4, voltage stimulation
4	channel 5, voltage stimulation
3	channel 6, voltage stimulation
2	channel 7, voltage stimulation
1	channel 8, voltage stimulation

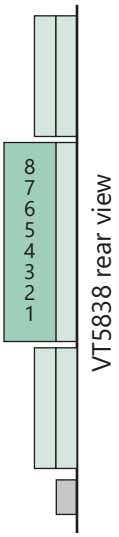

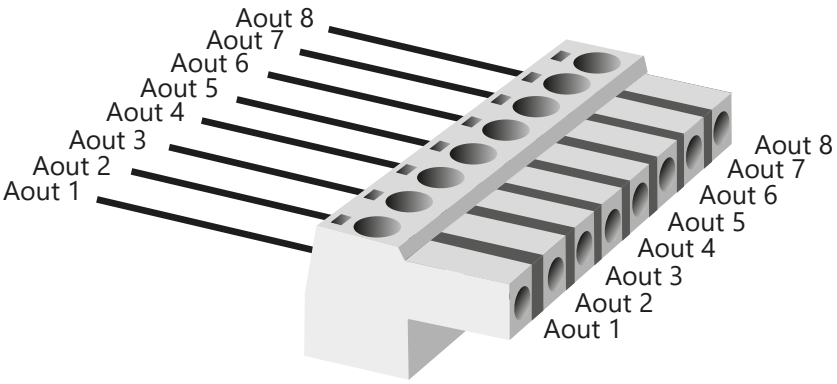

Figure **117:** Voltage Stimulation Connector 1

15.4.4 Voltage Stimulation Connector 2

Plug type: Phoenix Contact MC 1,5/8-ST-3,81

Plug allocation (from top to bottom, viewed from the rear after installation):

Pin	Description
8	channel 9, voltage stimulation
7	channel 10, voltage stimulation
6	channel 11, voltage stimulation
5	channel 12, voltage stimulation
4	channel 13, voltage stimulation
3	channel 14, voltage stimulation
2	AGND
1	AGND

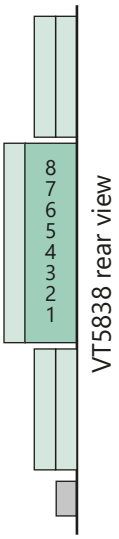

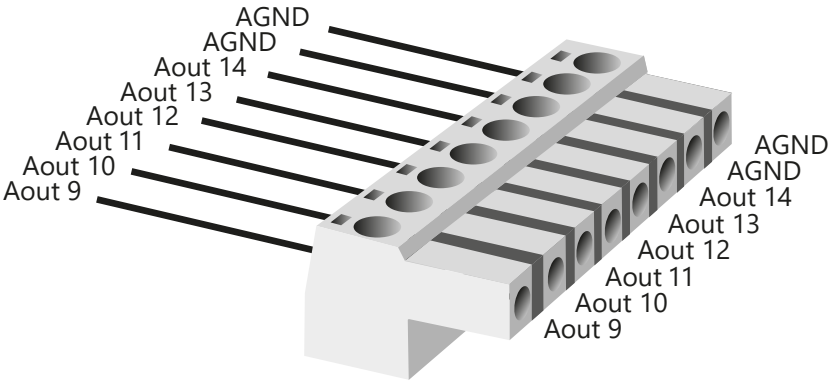

Figure **118:** Voltage Stimulation Connector 2

15.4.5 Digital I/O Connector 1

Plug type: Phoenix Contact MC 1,5/9-ST-3,81

Plug allocation (from top to bottom, viewed from the rear after installation):

Pin	Description
9	channel 1, Digital I/O pin
8	channel 2, Digital I/O pin
7	channel 3, Digital I/O pin
6	channel 4, Digital I/O pin
5	channel 5, Digital I/O pin
4	channel 6, Digital I/O pin
3	channel 7, Digital I/O pin
2	channel 8, Digital I/O pin
1	DGND

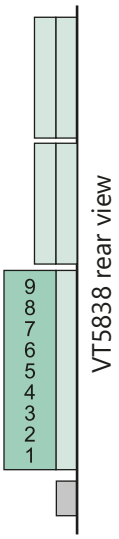

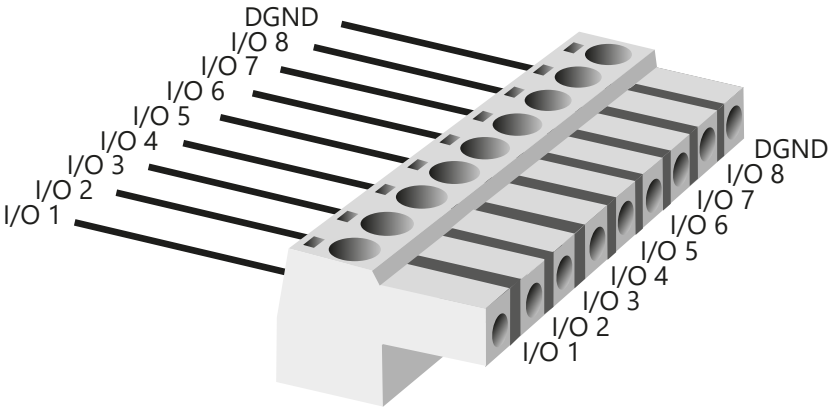

Figure **119:** Digital I/O connector 1

15.4.6 Digital I/O Connector 2

Plug type: Phoenix Contact MC 1,5/9-ST-3,81

Plug allocation (from top to bottom, viewed from the rear after installation):

Pin	Description
9	channel 9, Digital I/O pin
8	channel 10, Digital I/O pin
7	channel 11, Digital I/O pin
6	channel 12, Digital I/O pin
5	channel 13, Digital I/O pin
4	channel 14, Digital I/O pin
3	channel 15, Digital I/O pin
2	channel 16, Digital I/O pin
1	DGND

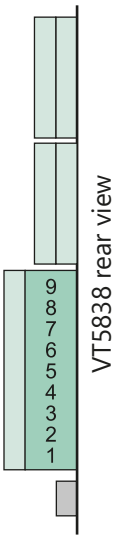

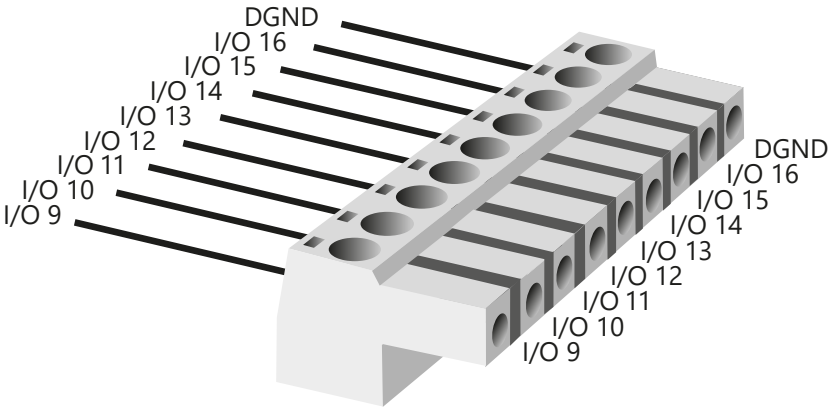

Figure **120:** Digital I/O connector 1

15.5 Technical Data VT5838

15.5.1 General

Parameter	Min.	Typ.	Max.	Unit
Supply voltage (via the backplane)	11.4	12	13.2	V
Power consumption at 12.0 V	9.8			W
Temperature range	0		+55	°C
Dimensions (length × width × depth)	300 x 36			mm
Total weight	approx. 404			g

15.5.2 Voltage Measurement

Parameter	Min.	Typ.	Max.	Unit
Measurement range (differential /single-ended) > range +/-5 V > range +/-20 V > range +/-60 V	 -5 -20 -60		 +5 +20 +60	 V V V
Impedance > range +/-5 V > range +/-20 V > range +/-60 V	 5 1 1			 MΩ MΩ MΩ
A/D Converter > Resolution > Sample rate for raw data (per channel)		 16 3.2		 Bits MSamples/s
Accuracy at 23±5°C, ±(% of value + offset) > range +/-5 V > range +/-20 V > range +/-60 V	 -(0+5 mV) -(0+20 mV) -(0+60 mV)		 +(0+5 mV) +(0+20 mV) +(0+60 mV)	

The accuracy of a measured voltage depends on two parts (% of value + offset). The first part (relative value) depends on the measured value; the second part (absolute value) is a fixed offset voltage.

As an example, if you measure a voltage of -5 V in the ±20 V range, you get an accuracy of ±20 mV (0 % of 5 V + 20 mV).

If you measure the same voltage in the ±60 V range, you get only an accuracy of ±60 mV (0 % of 5 V + 60 mV).

© Vector Informatik GmbH

15.5.3 Voltage Stimulation

Parameter	Min.	Typ.	Max.	Unit
Output voltage range > Channels 1-8 > Channels 9-14	 -15 -10		 +15 +10	 V V
Output current	-30		+30	mA
D/A converter > Resolution > Settling time (from zero scale to full scale) > Sample rate		 16 500 2		 Bits ns MSamples/s
Accuracy at 23±5°C, ±(% of value + offset) (output current < 50mA)	-(0+15 mV)		-(0+15 mV)	
Slew rate (resistive load, mA)		17		V/µs

15.5.4 Digital Input

Parameter	Min.	Typ.	Max.	Unit
Input voltage > pin against DGND	 -15		 +15	 V
Impedance	500			kΩ
Threshold range > Range > Resolution	 -12	 100	 +12	 V mV
Hysteresis		0.5		V
Sample rate		80		MSamples/s

15.5.5 Digital Output

Parameter	Min.	Typ.	Max.	Unit
Output voltage	0		+5	V
Output current	-20		+20	mA

Parameter	Min.	Typ.	Max.	Unit
Rise time (Push-Pull, 10% to 90%, no load)			1	µs
Fall time (Push-Pull, 90% to 10%, no load)			1	µs

15.5.6 LVDS

Parameter	Min.	Typ.	Max.	Unit
Supply Voltage		+2.5		V
Output current			+100	mA
Data Rate	10			Mbps

15.5.7 RS422

Parameter	Min.	Typ.	Max.	Unit
Supply Voltage		+3.3		V
Output current common			+100	mA
Mode input voltage range	-9		+14	V
Differential input threshold voltage	-0.2		+0.02	V
Input voltage hysteresis		50		mV
Common-mode output voltage	+1.6		+2.3	V
Data rate			26	Mbps

16 VT6000 - Real-Time Module

In this chapter you find the following information:

16.1 Purpose **240**
16.2 Installation **240**
16.2.1 Connections 240
16.3 Usage **241**
16.3.1 General 241
16.3.2 Update 242
16.4 Connectors **242**
16.4.1 PCI Express Ports 242
16.4.2 Ethernet Port 243
16.4.3 USB Ports 243
16.5 Technical Data VT6000 ..... **243**
16.5.1 General 243
16.5.2 VT6011 243
16.5.3 VT6051A 244

16.1 Purpose

The real-time module supplements the VT System, making it a high-performance real-time platform. The Real-time Module VT6000 is mounted within the VT System rack. It handles the execution of the real-time test and simulation part of CANoe (CANoe RT) and drives the VT System hardware. The user's PC is connected to the real-time module by Ethernet and does not affect the real-time behavior of the system.



Note

Several versions of the real-time module are available. They differ from one another mainly in terms of their processors, memory, and number of PCI Express channels. They do not differ in their usage, and most of the instructions in this manual apply to all versions of the module. The name VT6000 refers to all the different versions of the module, e.g. VT6011, VT6051A etc.

16.2 Installation

Please follow the general installation instructions in chapter 2.1.2 Modules.



NOTICE!

If you mount a VT6000 to the left of another VT module, make sure that the cooling unit of the VT6000 does not touch any of the components on the underside of the VT modules in the neighboring slot.

When building the module into the rack, you may put the VT6000 as far to the right as possible to prevent the cooling unit of the VT6000 from touching components on the rear of the next VT module in the rack. This is especially important with those module versions whose cooling units take up almost the entire height of the rack (e.g. the VT6011).

Some versions like the VT6051A have very high performance processors, which have higher cooling requirements. The cooling units and fans on these modules are so wide that it is not possible to use the slot directly next to the real-time module. You have to close it with a blank panel. This is necessary for all modules where the datasheet or manual specify a depth of more than 36 mm.

To enhance ESD (electro static discharge) protection of the module, the module can be connected to ground (earth) at a small connector below the PCI Express connectors at the rear. In this case, connect the module with a short cable with the rack that itself must be connected to ground (earth). Grounding of the VT6000 is especially recommended if the rack is operated without a rear plate and therefore the PCI Express plugs can be touched by the user.



Note

In a VT System only one Real-time Module VT6000 can be used. CANoe supports only one real-time device and real-time devices cannot be cascaded. Therefore, only one VT6000 can be used in a system and the real-time network interfaces VN8900 cannot be used on the VT6000.

16.2.1 Connections

Make the following connections before switching the module on:

- Connect the VT network modules (e.g. the VT6104) to the PCI Express ports using short PCI Express x1 cables. The cables are provided with the network modules.
- Connect the Ethernet port on the rear of the VT System backplane to the corresponding port on the VT6000 using a short Ethernet cable. This is necessary despite the fact that the VT6000 is already connected to the backplane via the slot connector. The EtherCAT® connection on the slot connector is not used because the VT6000 is the EtherCAT® master for the VT System, which means that it needs to be connected to the backplane via the Ethernet port.
- Connect the User PC to the VT6000 using a standard Ethernet cable. You can do this via a direct connection (recommended), a switch or via the company network. For more information, see the CANoe online help.
- The two USB ports at the front can be used to connect additional hardware like Vector network interfaces (excluding VN8900), CANstress, or USB-to-Serial adapters (with FTDI or Prolific chipset). Only these explicitly supported HW devices can be used. Additional USB drivers cannot be installed on the VT6000.

Beside the hardware connections it is necessary to make also some settings in CANoe:

- Update the VT6000 to the same version as CANoe, so that CANoe can source out the real-time part to the VT6000.
- If both, the VT6000 and CANoe, have the same version, you have then to connect CANoe with the VT6000.
- If network interfaces like the VT6104 are connected to the VT6000, you can configure the network interface in the **Vector Hardware Configuration** of the VT6000. The connection to the VT6000 can be established with a remote desktop connection, started from CANoe.



Cross Reference

For more information about the settings in CANoe, supported I/O devices and their usage at the VT6000, refer to the CANoe online help.

16.3 Usage

16.3.1 General

The VT6000 real-time module acts as the CANoe RT server. In this mode of operation, the hardware interfaces, VT System and other I/O devices are no longer connected directly to the User PC; instead, they are connected to a second PC which runs the real-time-specific parts of CANoe. The User PC simply runs the graphical user interface. CANoe RT mode is largely transparent for the user, since CANoe automatically manages the assignment of tasks and transmission of necessary data to the RT server. The particularities involved in using CANoe RT mode are described in the CANoe online help.

The VT6000 real-time module comes completely pre-installed and does not normally require any other maintenance.

The VT6051A supports Extended Realtime (ERT) from the Vector Tool Platform (VTP). With ERT, the timer precision and the determinism of CANoe and CANape are improved.

Take the following guidelines into consideration when setting up the system:

- All network interfaces need to be connected to the VT6000. This includes the VT network modules but also for instance the VN1610 or VN1600 Vector network interfaces that are connected via USB ports.
- The VT System itself needs to be connected to the VT6000.

> Should you want to connect additional CANoe I/O or peripheral devices, you can connect these via the two USB ports on the front of the VT6000.
> CANoe RT cannot be cascaded. This means that you can use only one VT6000 in the system, and you cannot run the User PC as an RT server at the same time.

Note

When you switch the system on, it can take up to 60 seconds until the VT6000 can be accessed and operated via the Ethernet connection.

16.3.2 Update

Cross Reference

For detailed information on how to carry out the update, see the CANoe online help.

16.4 Connectors

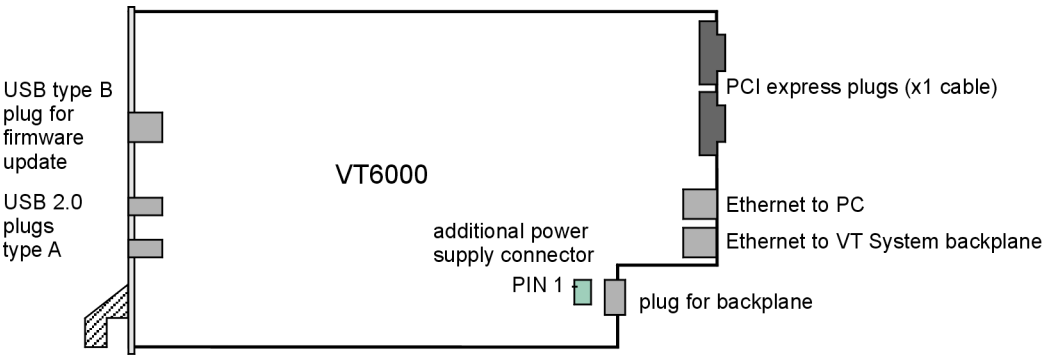

Figure **121:** Connectors

16.4.1 PCI Express Ports

The PCI Express ports serve to connect the VT network modules. PCI Express x1 cables that are compatible with these standardized ports are used for this purpose. These are 1:1 connections. You can also connect additional network modules with a PCI Express x1 switch.

16.4.2 Ethernet Port

The VT6000 has a separate Ethernet port that is used exclusively to connect it to the VT System. You cannot use a switch with this port.



NOTICE!

The supplemental power supply plug is not needed and should not be connected (pin assignment: pin 1 ground, pin 2 supply voltage 12 V).

16.4.3 USB Ports

The USB ports (2 x type A) on the front of the module are used to connect USB network interfaces or other I/O devices. The VT6000's operating system needs to support these I/O devices.

16.5 Technical Data VT6000

16.5.1 General

Parameter	Min.	Typ.	Max.	Unit
Supply voltage (via the backplane)	11.4	12	12.6	V
Temperature range	0		+55	°C

16.5.2 VT6011

Parameter	Min.	Typ.	Max.	Unit
CPU	Intel® Celeron J1900, 2,0 GHz			
Main memory (RAM)	2			GByte
Flash memory	8			GByte
LAN (Ethernet to PC)	10/100/1000			Mbit/s
PCI Express x1 cable channels	2			
Power consumption at 12.0 V > standby > full load		 8 14		 W W
Dimensions (length × width × depth)	300 x 173 x 36			mm
Total weight	approx. 550			g

16.5.3 VT6051A

Parameter	Min.	Typ.	Max.	Unit
CPU	Intel® CoreTM i7 3555LE, 2,5 GHz			
Main memory (RAM)	4			GByte
Flash memory	8			GByte
LAN (Ethernet to PC)	10/100/1000			Mbit/s
PCI Express x1 cable channels	4			
Power consumption at 12.0 V > standby > full load		 11.5 50		 W W
Dimensions (length × width × depth)	300 x 173 x 47			mm
Total weight	approx. 750			g

17 VT6020/VT6060/VT6061 - Real-Time Module

In this chapter you find the following information:

17.1 Purpose **246**
17.2 Installation **246**
17.2.1 Connections 246
17.2.2 VH9100 247
17.3 Usage **247**
17.3.1 General 247
17.3.2 Update 248
17.4 Connectors **249**
17.4.1 Base Board 249
17.4.2 VT6020 249
17.4.3 VT6060/VT6061 249
17.4.4 PCI Express Ports 250
17.4.5 Ethernet Port 250
17.4.6 USB3 Ports 250
17.4.7 Display Port 250
17.4.8 USB for Keyman 250
17.5 Technical Data VT6020/VT6060/VT6061 ..... **250**
17.5.1 General 250
17.5.2 VT6020 250
17.5.3 VT6060 251
17.5.4 VT6061 251

17.1 Purpose

The real-time module supplements the VT System, making it a high-performance real-time platform. The Real- time Module VT6020/VT6060/VT6061 is mounted within the VT System rack. It handles the execution of the real-time test and simulation part of CANoe (CANoe RT) and drives the VT System hardware. The user's PC is connected to the real-time module by Ethernet and does not affect the real-time behavior of the system.

17.2 Installation

Please follow the general installation instructions in chapter 2.1.2 Modules.



NOTICE!

If you mount a VT6020/VT6060/VT6061 to the left of another VT module, make sure that the cooling unit of the VT6020/VT6060/VT6061 does not touch any of the components on the underside of the VT modules in the neighboring slot.

To enhance ESD (electro static discharge) protection of the module, the module can be connected to ground (earth) at a small connector below the PCI Express connectors at the rear. In this case, connect the module with a short cable with the rack that itself must be connected to ground (earth). Grounding of the VT6000 is especially recommended if the rack is operated without a rear plate and therefore the PCI Express plugs can be touched by the user.



Note

In a VT System only one Real-time Module VT6020/VT6060/VT6061 can be used. CANoe supports only one real-time device and real-time devices cannot be cascaded. Therefore, only one VT6020/VT6060/VT6061 can be used in a system and the real-time network interfaces VN8900 cannot be used on the VT6000.

17.2.1 Connections

Make the following connections before switching the module on:

- Connect the VT network modules (only “B” variants, e.g. VT6104B) to the PCI Express ports using short PCI Express SFF8644 cables. The cables are provided with the network modules. For the use of none “**B**” modules refer to chapter VH9100.
- Connect the Ethernet port on the rear of the VT System backplane to the corresponding port on the VT6020/VT6060/VT6061 using a short Ethernet cable. This is necessary despite the fact that the VT6020/VT6060/VT6061 is already connected to the backplane via the slot connector. The EtherCAT® connection on the slot connector is not used because the VT6020/VT6060/VT6061 is the EtherCAT® master for the VT System, which means that it needs to be connected to the backplane via the Ethernet port.
- Connect the User PC to the VT6020/VT6060/VT6061 using a standard Ethernet cable. You can do this via a direct connection (recommended), a switch or via the company network. For more information, see the CANoe online help.

> The USB 3.0 ports at the front and back can be used to connect additional hardware like Vector network interfaces (excluding VN8900), CANstress, or USB-to-Serial adapters (with FTDI or Prolific chipset). Only these explicitly supported HW devices can be used. Additional USB drivers cannot be installed on the VT6020/VT6060/VT6061.

Beside the hardware connections it is necessary to make also some settings in CANoe:

> Update the VT6020/VT6060/VT6061 to the same version as CANoe, so that CANoe can source out the real-time part to the VT6020/VT6060/VT6061.
> If both, the VT6020/VT6060/VT6061 and CANoe, have the same version, you have to connect CANoe with the VT6020/VT6060/VT6061.
> If network interfaces like the VT6104B are connected to the VT6020/VT6060, you can configure the network interface in the **Vector Hardware Configuration** of the VT6020/VT6060/VT6061. The connection to the VT6020/VT6060/VT6061 can be established with a remote desktop connection, started from CANoe.

Cross Reference

For more information about the settings in CANoe, supported I/O devices and their usage at the VT6020/VT6060, refer to the CANoe online help.

17.2.2 VH9100

In Order to use network interfaces with a Molex PCIe connector (VT6104A, VT6204 and VT6306) the VH9100 SFF to Molex Adapter can be used. For the connection from the VT6020/VT6060/VT6061 to the VH9100 it is needed to use the supplied, application specific cable. For the connection between the VH9100 and the network interface a standard Molex PCIe cable can be used.



Figure **122:** VH9100 connection

17.3 Usage

17.3.1 General

The VT6020/VT6060/VT6061 real-time module acts as the CANoe RT server. In this mode of operation, the hardware interfaces, VT System and other I/O devices are no longer connected directly to the User PC; instead, they are connected to a second PC which runs the real-time-specific parts of CANoe. The User PC simply runs the graphical user interface. CANoe RT mode is largely transparent for the user, since CANoe automatically manages the assignment of tasks and transmission of necessary data to the RT server. The particularities involved in using CANoe RT mode are described in the CANoe online help.

The VT6020/VT6060/VT6061 real-time module comes completely pre-installed and does not normally require any other maintenance.

The VT6060/VT6061 supports Extended Realtime (ERT) from the Vector Tool Platform (VTP). With ERT, the timer precision and the determinism of CANoe and CANape are improved.

Take the following guidelines into consideration when setting up the system:

- All network interfaces need to be connected to the VT6020/VT6060/VT6061. This includes the VT network modules but also for instance the VN1610 or VN1600 Vector network interfaces that are connected via USB ports.
- The VT System itself needs to be connected to the VT6020/VT6060/VT6061.
  Preferred Ethernet connectors: 1G ports.
- If you want to connect additional CANoe I/O or peripheral devices, you can connect these via the USB ports on the front and back of the VT6020/VT6060/VT6061.
- CANoe RT cannot be cascaded. This means that you can use only one VT6020/VT6060/VT6061 in the system, and you cannot run the User PC as an RT server at the same time.



Note

When you switch the system on, it can take up to 60 seconds until the VT6020/VT6060/VT6061 can be accessed and operated via the Ethernet connection.

17.3.2 Update



Cross Reference

For detailed information on how to carry out the update, see the CANoe online help.

17.4 Connectors

17.4.1 Base Board

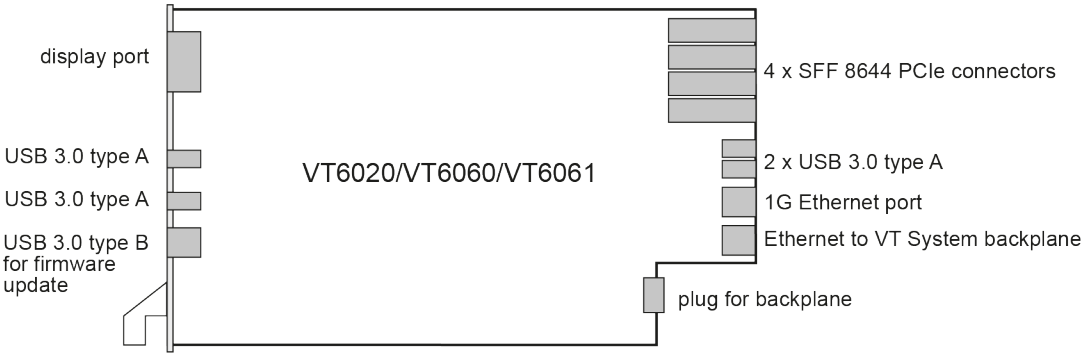

Figure **123:** Connectors

17.4.2 VT6020

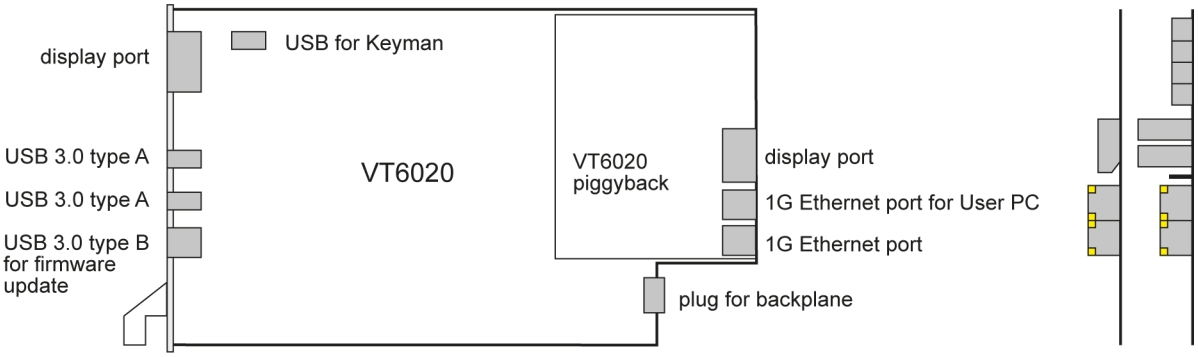

Figure **124:** VT6020

17.4.3 VT6060/VT6061

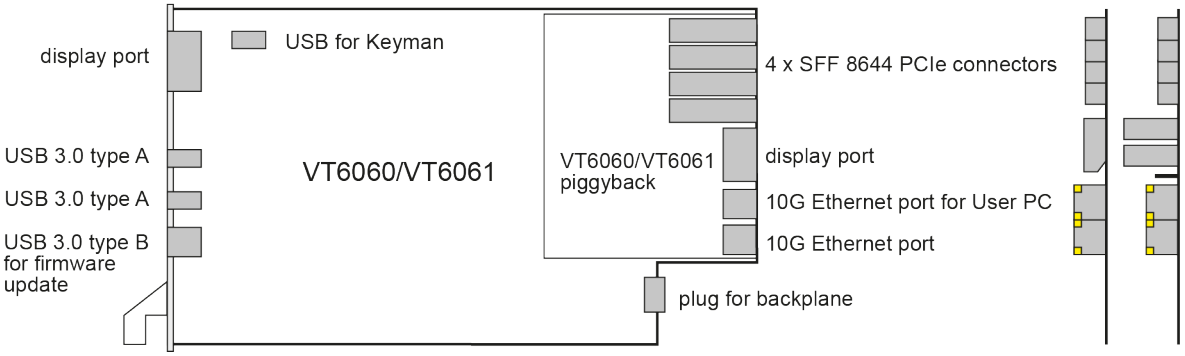

Figure **125:** VT6060/VT6061

17.4.4 PCI Express Ports

The PCI Express ports serve to connect the VT network modules. PCI Express Gen3 SFF8644 x1 cables that are compatible with these standardized ports are used for this purpose. These are 1:1 connection.

17.4.5 Ethernet Port

The VT6020/VT6060/VT6061 has a separate Ethernet port that is used exclusively to connect it to the VT System. You cannot use a switch with this port.

17.4.6 USB3 Ports

The USB3 ports (4 x type A) on the front and back of the module are used to connect USB network interfaces or other I/O devices. The VT6020/VT6060/VT6061's operating system needs to support these I/O devices.

17.4.7 Display Port

Only one monitor is supported, ether front or back.

17.4.8 USB for Keyman

On the VT6020/VT6060/VT6061 base board, one additional USB port is reserved for the keyman support.

17.5 Technical Data VT6020/VT6060/VT6061

17.5.1 General

Parameter	Min.	Typ.	Max.	Unit
Supply voltage (via the backplane)	11.4	12	12.6	V
Temperature range	0		+55	°C

17.5.2 VT6020

Parameter	Min.	Typ.	Max.	Unit
CPU	Intel® Atom™ E3950, 1,6 GHz			
Main memory (RAM)	16			GByte
SSD	128			GByte
LAN (Ethernet to PC)	100/1000			Mbit/s
PCI Express Gen3 x1 cable channels	4			

Parameter	Min.	Typ.	Max.	Unit
Power consumption at 12.0 V > standby > full load		 11 22		 W W
Dimensions (length × width × depth)	300 x 173 x 36			mm
Total weight	approx. 550			g

17.5.3 VT6060

Parameter	Min.	Typ.	Max.	Unit
CPU	Intel® Core™ i7 9850HE, 2,7 GHz			
Main memory (RAM)	32			GByte
Flash memory	128			GByte
LAN (Ethernet to PC)	2x100/1000 / 2x100/1000/10000			Mbit/s
PCI Express Gen3 x1 cable channels	8			
Power consumption at 12.0 V > standby > full load		 22 60		 W W
Dimensions (length × width × depth)	300 x 173 x 47			mm
Total weight	approx. 750			g



Note

Power consumption might be higher during booting.

17.5.4 VT6061

Parameter	Min.	Typ.	Max.	Unit
CPU	Intel® Core™ Processor i7-11850HE, 8C/16T, 2.6/4.7 GHz			
Main memory (RAM)	32			GByte
Flash memory	128			GByte

Parameter	Min.	Typ.	Max.	Unit
LAN (Ethernet to PC)	2x100/1000 / 2x100/1000/10000			Mbit/s
PCI Express Gen3 x1 cable channels	8			
Power consumption at 12.0 V > standby > full load		 22 60		 W W
Dimensions (length × width × depth)	300 x 173 x 47			mm
Total weight	approx. 1050			g



Note

Power consumption might be higher during booting.

18 VT6104B/VT6204B - Network Module

In this chapter you find the following information:

18.1 Purpose **254**
18.1.1 VT6104B 254
18.1.2 VT6204B 254
18.2 Installation **254**
18.3 Usage **254**
18.3.1 Basic Connection Scheme 254
18.3.2 Signal Path Switching 255
18.3.3 Optional Disturbance Piggyback 256
18.3.4 Displays 256
18.4 Network Interface Usage **257**
18.4.1 Bus Configuration 257
18.4.2 Driver Installation 258
18.4.3 Synchronization 258
18.5 Connectors **260**
18.5.1 CAN/LIN/FR Connector (Channel 1 & 2) 260
18.5.2 CAN/LIN Connector (Channel 3 & 4) 262
18.5.3 Bus Bar Connector 263
18.5.4 Sync Connector 264
18.6 RLCpiggy **264**
18.6.1 Installation 265
18.6.2 Control via CANoe 265
18.7 Technical Data VT6104B/VT6204B **266**
18.7.1 General 266
18.7.2 Signals and Switching 266
18.7.3 CAN/LIN/FR Interface 267

18.1 Purpose

18.1.1 VT6104B

The four-channel CAN/LIN Network Module VT6104B is a high-performance interface module for the VT System. Typically, the Real-time Module VT6000 is used together with the VT6104B network interface. The module delivers high performance and low latency times, because a SFF 8644 PCIe cable is used to connect the network interface to the VT6000 real-time module or a PC.

Additionally, the Network Module VT6104B provides some relays to control the transceivers (e.g. to supply the transceiver with V_{batt}), to switch termination resistors on and off, and to fed electrical faults (e.g. short-circuit to Vbatt) into the signal lines.

18.1.2 VT6204B

The VT6204B provides the same functionality as the VT6104B but supports besides CAN and LIN also a two-channel FlexRay cluster (FR A and FR B) on the first and the second port.

18.2 Installation

Please follow the general installation instructions in chapter 2.1.2 Modules.

The VT6104B/VT6204B Network Module is provided by the backplane with power and the control commands for the relays. The network interface itself is controlled via PCI Express. Therefore, connect the VT6104B/VT6204B using a PCI Express x1 cable to the VT6000 real-time module or a PC.

If the VT6104B/VT6204B is connected to the VT6000 you must configure the VT6104B/VT6204B in the **Vector Hardware Configuration** of the VT6000. This can be done using a remote desktop connection started from CANoe.



Cross Reference

More information about the settings in CANoe can be found in the CANoe online help.

18.3 Usage

18.3.1 Basic Connection Scheme

The connectors located above the backplane on the rear of the module can be used to make the following connections:

- **CAN/LIN/FR**
  Each of the four CAN/LIN channels and the two FR channels (port 1 of VT6204B) leads out to an individual connector. You normally connect the bus lines to the ECU. In this respect, these connections are like the ECU connections of other VT modules.
  The bus connection's Ground also leads separately to each connector. It is important that you connect Ground because the CAN/LIN/FR transceiver is galvanically isolated. However, you can also create a grounding connection internally using a relay, which may make external wiring unnecessary.
  You can use the connectors of the four channels to connect additional pins of the CAN/LIN piggybacks. These are intended for special functions and should only be used when needed. You can also use them internally with relays.

- **ECU battery voltage and ground**
  You can connect the battery voltage and ground of the ECU to this dedicated bus bar.
- **Bus bar**
  The VT6104B/VT6204B has exactly one bus bar, which can also be connected externally. You normally connect the bus bar lines with the bus bar lines of other VT modules. You can use the bus bar to e.g. generate short circuits between different ECU connections.

18.3.2 Signal Path Switching

The figure below shows the various signal paths and switching options for the first and the second port of the VT6204B which also supports FlexRay. The remaining two ports of the VT6204B and all four ports of the VT6104B have the same structure but do not have the FlexRay option.

Note

Pins 5, 9, 8, and 6 are only internally connected and not available at the connectors of channel 3 and 4.

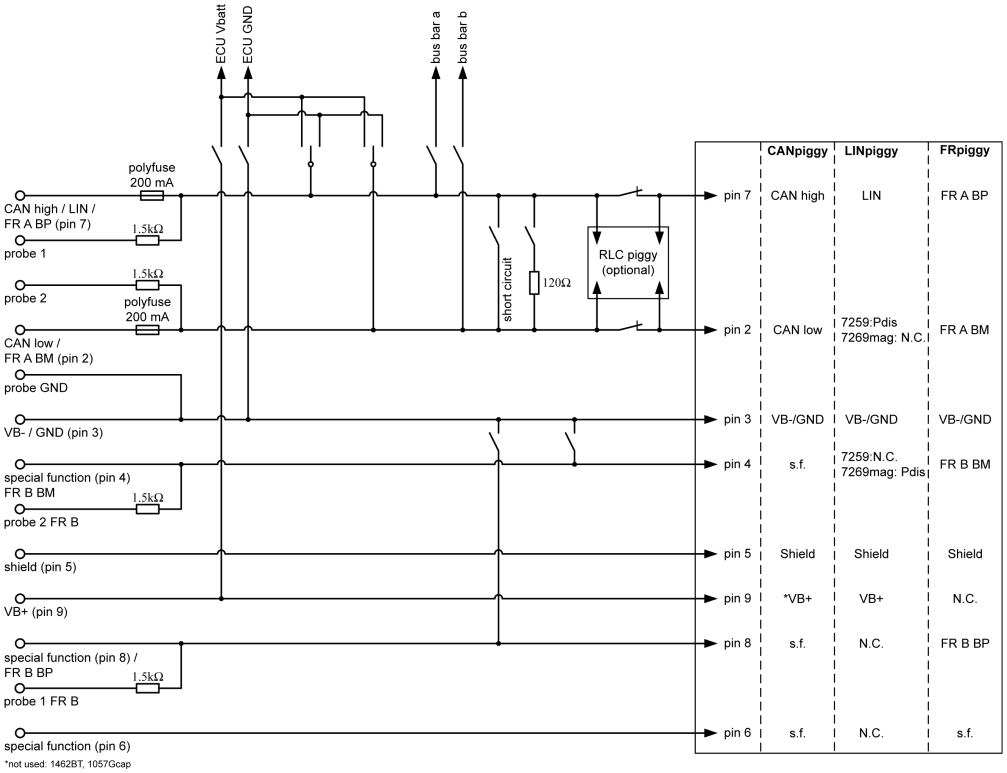

Figure **126:** Signal paths and switching options

18.3.3 Optional Disturbance Piggyback

By using an optional disturbance piggyback (e.g. RLCpiggy) with each channel, you can use additional relays to switch disturbances to the bus lines (e.g. switching a capacitance between CAN High and CAN Low). Up to 9 relays are supported.

Disturbance piggybacks are unrelated to CAN/LIN transceiver piggybacks. The actual usage and switching of each disturbance piggyback depend on which particular piggyback you use.

18.3.4 Displays

Activity

Multicolored channel LEDs, each indicating the bus activity for CAN or LIN.

Color	Description
Green	Rx/Tx Data frames have been correctly sent or received.
Orange	Rx/Tx Error Frames have been sent or received. The flashing frequency varies according to the message rate.
Red	Bus off

FlexRay

A/B Multicolored channel LEDs which are indicating the sync state of FlexRay. These LEDs are only available at the front panel of the VT6204B.

Color	Description
Off	Offline
Green	Synchronized
Orange	Not synchronized
Red	Error

Disturbed

This LED indicates that one of the disturbance relays of the specific channel is active.

This is independent from the used transceiver piggyback. Therefore, the disturbance LED may show the activity of a disturbance relay that is not used by the actual transceiver piggyback.

Status

Multi-colored LED that indicates the status of the network interface.

Color	Description
Green	**On**: Measurement is running. **Flashing**: The network interface is ready for operation/running measurement.
Orange	**On**: The Module can be accessed (e.g. for update), but no measurement is possible. **Flashing**: The network interface hardware is booting. Please wait.
Red	**On**: Error, network interface part of the module is not ready for operation. Turn off the power supply and try to start the module again.

18.4 Network Interface Usage

18.4.1 Bus Configuration

The VT6104B/VT6204B network interface has four ports that can be configured independently for CAN (max. 4) or LIN (max. 4). FlexRay can be used only on port 1 and 2of the VT6204B.

Depending on requirements, electrically decoupled High-Speed CAN, Low-Speed CAN, Single Wire CAN or LIN transceivers may be used in any combination.

- For the VT6104B/VT6204B CANpiggies and LINpiggies can be used for channels 1 to 4. CANpiggies must be populated in ascending order; LINpiggies in descending order (see examples).
- For K-Line LINpiggies have to be used. K-Line can be used only on the channels 3 and 4.
- On the VT6204B a FRpiggy can be inserted for a two-channel FlexRay connection at channel 1 and 2 (A and B of a cluster). Alternatively, a CANpiggy or LINpiggy can be also used at channel 1.

Examples of allowed piggy configurations for VT6104B/VT6204B

Channel 1	CAN	**Channel 1**	CAN
Channel 2	CAN	**Channel 2**	LIN
Channel 3	LIN / K-Line	**Channel 3**	LIN / K-Line
Channel 4	LIN / K-Line	**Channel 4**	LIN / K-Line

Example of allowed piggy configurations for VT6204B

Channel 1	FlexRay
Channel 2	CAN
Channel 3	LIN / K-Line
Channel 4	LIN / K-Line

Example of NOT allowed piggy configurations for VT6104B/VT6204B

Channel 1	CAN
Channel 2	LIN / K-Line
Channel 3	CAN
Channel 4	LIN / K-Line



Cross Reference

See the accessories manual for a list of available CANpiggies, LINpiggies and FRpiggies as well as their pin assignments. A transceiver compatibility list can be found in the knowledge base located at the support area on the Vector website.



Note

Please note that only electrically decoupled piggybacks are supported.

18.4.2 Driver Installation



Cross Reference

The drivers are installed via the Vector Tool Platform. You can find detailed information on this in the Vector Tool Platform help.

18.4.3 Synchronization

Time stamps, which are created during a measurement by devices of the Vector network interfaces (VT6104B/VT6204B, VN family), can be synchronized by software or hardware.

The **software synchronization** is driver-based. This kind of synchronization can be switched on in Vector Hardware Config -> **General information|Settings|Software time synchronization**. The accuracy of the time stamp correction depends on the device and is typically 10-20 µs.

The **hardware synchronization** of maximum four devices is realized by the SYNC-cable. The accuracy of the time stamp correction depends on the application and is typically 1 µs.

The devices to be synchronized must be interconnected by a party line (two-wire bus; signals: SYNC and GND). At each high-low edge of the sync line the Vector device generates a time stamp that is provided to the application via the driver. This allows the application to synchronize the time stamps of different devices to a common time base. The synchronization edges are created by the VT6104B/VT6204B.



Cross Reference

Please refer to the CANoe online help for further information about hardware synchronization with VT System.



Note

Hardware time synchronization must be activated in CANoe. For further information please refer to the CANoe online help. Please note that the time synchronization of the driver must be disabled, if multiple devices are interconnected via the synchronization line (see Vector Hardware Config -> **General information|Settings|Software time synchronization**).

18.5 Connectors

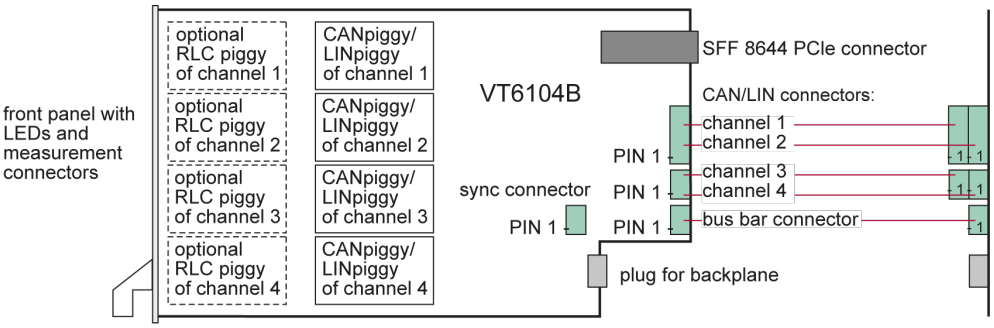

Figure **127:** Connectors VT6104B

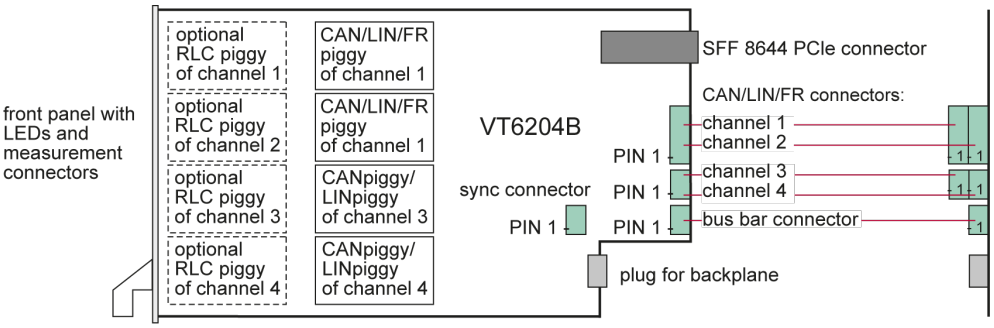

Figure **128:** Connectors VT6204B

18.5.1 CAN/LIN/FR Connector (Channel 1 & 2)

FlexRay is only possible on channel 1 and 2when using the VT6204B. On the VT6104B, only CAN and LIN is supported on channel 1 and 2.

Plug type: Phoenix Contact MC 1,5/8-ST-3,81

Plug allocation (from top to bottom, viewed from the rear after installation):

Pin	CAN	LIN	FR	Piggyback Pin
8	CAN high	LIN	FR A BP	7
7	CAN low	7259: Pdis 7269mag: N. C.	FR A BM	2
6	VB-/GND	VB-/GND	VB-/GND	3
5	s. f.	7259: N. C. 7269mag: Pdis	FR A BM	4

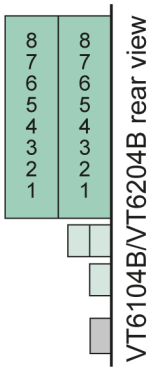

Pin	CAN	LIN	FR	Piggyback Pin
4	s. f.	N. C.	FR A BP	8
3	VB+ (if supported)	VB+	N. C.	9
2	Shield	Shield	Shield	5
1	s. f.	N. C.	s. f.	6

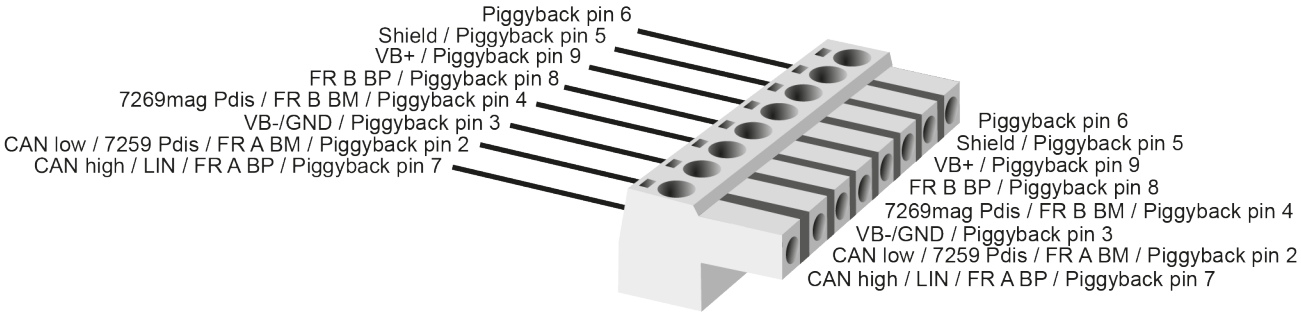

Figure **129:** CAN/LIN/FR connector

The functions of the pins depend on the used piggyback and are described in the documentation of the piggyback. Most Vector network interfaces use a D-Sub-9 connector for bus signals, and the description of the piggybacks are related to the D-Sub-9 pins. Therefore, the bus signals use the pin name (**piggyback pin X**) as defined for the typical D-Sub-9 connectors in this manual and CANoe.

NOTICE!

Don't confuse the pin names with the pin numbering of the Phoenix connectors at the VT6104B/VT6204B!

Example

At the VT6104B/VT6204B the signal named **GND (pin 3)** is connected to pin 6. The same pin of the piggyback would be found on pin 3 of a D-Sub-9 connector if another Vector network interfaces would be used. In the documentation of the piggyback this signal line is described as the function of pin 3.

18.5.2 CAN/LIN Connector (Channel 3 & 4)

Plug type: Phoenix Contact MC 1,5/4-ST-3,81

Plug allocation (from top to bottom, viewed from the rear after installation):

Pin	CAN	LIN	Piggyback Pin
4	CAN high	LIN	7
3	CAN low	s. f.	2
2	VB-/GND	VB-/GND	3
1	s. f.	s. f.	4

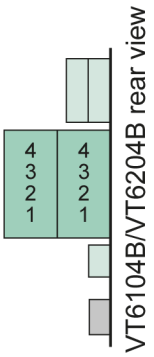

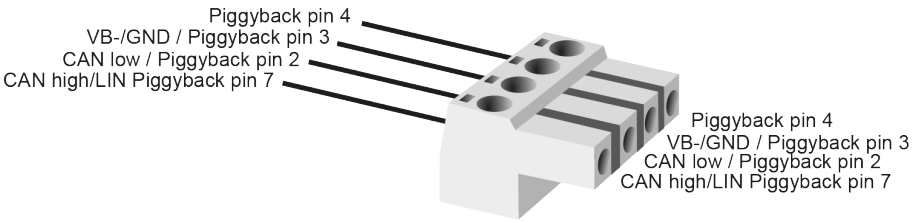

Figure **130:** CAN/LIN connector

The functions of the pins depend on the used piggyback and are described in the documentation of the piggyback. Most Vector network interfaces use a D-Sub-9 connector for bus signals, and the description of the piggybacks are related to the D-Sub-9 pins. Therefore, the bus signals use the pin name (**piggyback pin X**) as defined for the typical D-Sub-9 connectors in this manual and CANoe.

Example for pin names see chapter 18.5.1 CAN/LIN/FR Connector (Channel 1 & 2)

NOTICE!

Don't confuse the pin names with the pin numbering of the Phoenix connectors at the VT6104B/VT6204B!

18.5.3 Bus Bar Connector

Plug type: Phoenix Contact MC 1,5/4-ST-3,81

Plug allocation (from top to bottom, viewed from the rear after installation):

Pin	Description
4	ECU V_{batt}
3	ECU ground
2	Bus bar, pin a
1	Bus bar, pin b

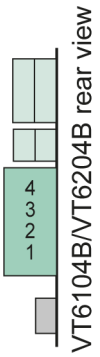

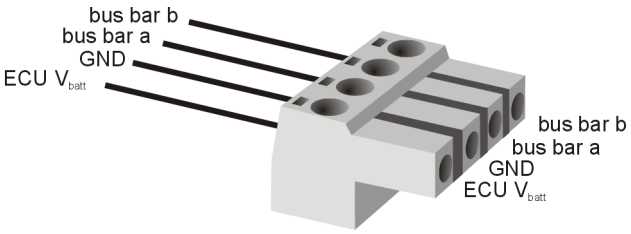

Figure **131:** Bus bar connector

18.5.4 Sync Connector

Plug type: Phoenix Contact MC 1,5/2-ST-3,81

Plug allocation (from top to bottom, viewed from the rear after installation):

Pin	Description
2	Ground
1	Sync signal

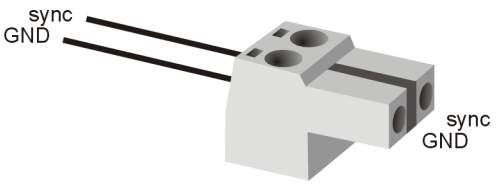

Figure **132:** Sync connector

18.6 RLCpiggy

Each of the four channels on a VT6104B/VT6204B has a slot for what is called a RLCpiggy. Such an expansion board is used to generate relay-controlled faults on CAN and LIN channels. Resistors (**R**), inductors (**L**) and capacitators (**C**) can be soldered on to it to generate faults that meet the user's individual requirements.

The RLCpiggy has six relays (RL0...5) which are used to control the components soldered on by the user. The following illustration shows the schematic structure of the expansion board:

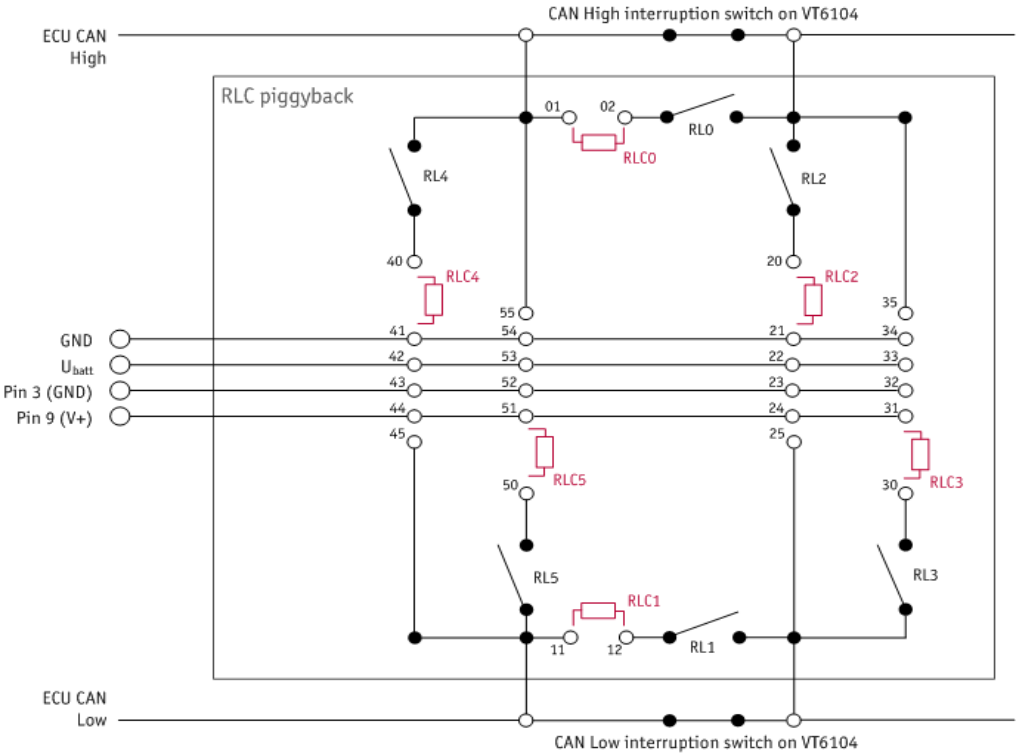

Figure **133:** RLCpiggy

The numbering of the relays in the circuit diagram and the available soldering points correspond to the numbering printed on the RLCpiggy.

18.6.1 Installation

You can generate a variety of faults depending on which components you solder to RLC0...5. For instance, you can switch the R, L and C elements onto a CAN line (RLC0, RLC1). You can also switch CAN lines via the R, L or C elements against Ground, Vbatt or another CAN line (RLC2...5).

The VT6104B/VT6204B's board has a pair of 10-pin connectors for each of its four channels; you can connect an RLCpiggy to each of these. The use of RLCpiggys is optional, i.e. you don't have to connect an expansion board to all of the channels. You can affix the RLCpiggy using distance sleeves and screws.

NOTICE!

Please use utmost care when connecting an RLCpiggy to prevent damage to the RLCpiggy and the VT6104B/VT6204B.

18.6.2 Control via CANoe

You can control the relays in CANoe via the corresponding system variables for each VT6104B/VT6204B channel. These system variables are always available in CANoe, regardless of whether or not the RLCpiggy is in use. This means you don't need to adjust any CANoe settings prior to using the RLCpiggy.

18.7 Technical Data VT6104B/VT6204B

18.7.1 General

Parameter	Min.	Typ.	Max.	Unit
Supply voltage (via the backplane)	11.4	12	12.6	V
Power consumption > VT6104B/VT6204B		7.5		W
Temperature range	0		+55	°C
Dimensions (length × width × depth)	300 x 173 x 36			mm
Total weight	approx. 550			g

18.7.2 Signals and Switching

Parameter	Min.	Typ.	Max.	Unit
Input voltage (line break relays open) > Input pin against ECU ground (AGND)	-40		+40	V
Input current (line break relays open, current e.g. over short circuit relay)	2		200	mA

18.7.3 CAN/LIN/FR Interface

Parameter	Specification
CAN channels	Up to four independent channels, according to the Cab; sending and receiving 100% bus load; certified Vector CAN controller (FPGA).
LIN channels	Up to four independent channels, according to the Cab; sending and receiving 100% bus load; conformance tests of LIN2.1 specification.
FR channel (VT6204B only)	2 FlexRay cluster (with 2 channels A and B), Bosch E-Ray analyses controller (FPGA), Fujitsu MB88121 start-up controller, 2 MB transmitter buffer
Supported Transceivers	See Transceiver Compatibility List
CAN identifier	11/29 bit
CAN Error Frame/remote frame	Detection & generation
Bus transceiver specifications	See Bus Transveiver Overview
Time stamp accuracy	> **Resolution**: 1 ns > **Accuracy** (within one device): 1 µs > **Accuracy software sync**: typ. 10 µs > **Accuracy hardware sync**: typ. 1 µs
Operating system	Windows10 (64 bit)

19 VT6306B – Ethernet Network Module

In this chapter you find the following information:

19.1 Purpose **269**
19.2 Installation **269**
19.3 Usage **269**
19.3.1 Basic Connection Scheme 269
19.3.2 Signal Path Switching 270
19.3.3 Signal Attenuation 272
19.3.4 Using the Bus Bars 272
19.3.5 Displays 273
19.4 Network Interface Usage **273**
19.4.1 Synchronization 275
19.5 Connectors **275**
19.5.1 Bus Bar Connector 276
19.5.2 Sync Connector 276
19.5.3 Ethernet Connector 276
19.6 Connectors 100BASE-T1piggy 1101 ..... **277**
19.6.1 Automotive Ethernet Connector 1 (Channel 1 & 2) 277
19.6.2 Automotive Ethernet Connector 2 (Channel 3 & 4) 278
19.6.3 Automotive Ethernet Connector 3 (Channel 5 & 6) 278
19.7 Connectors 1000BASE-T1piggy 88Q2112 ..... **280**
19.7.1 Automotive Ethernet Connector 1 (Channel 1 & 2) 280
19.7.2 Automotive Ethernet Connector 2 (Channel 3 & 4) 281
19.7.3 Automotive Ethernet Connector 3 (Channel 5 & 6) 281
19.8 Connectors VTpiggy 6AE1G 88Q2221M **283**
19.8.1 Automotive Ethernet Connector 1 (Channel 1 & 2) 283
19.8.2 Automotive Ethernet Connector 2 (Channel 3 & 4) 284
19.8.3 Automotive Ethernet Connector 3 (Channel 5 & 6) 284
19.9 Technical Data VT6306B **285**
19.9.1 General 285
19.9.2 Signals and Switching 286
19.9.3 Ethernet Interfaces 287

19.1 Purpose

The Network Module VT6306B is a high-performance interface module for the VT System. It provides six Automotive Ethernet channels on a piggy module (separate article) and two standard Ethernet channels. Typically, the VT6306B network interface is used together with the Real-time Module VT6000. The module is connected to the VT6000 real-time module or the CANoe RT Rack PC with a PCI-Express cable. A suitable PCIe 1x cable adapter (separate article) has to be installed in CANoe RT Rack PCs in order to allow the operation of a VT6306B module.

The Network Module VT6306B also provides the possibility to feed electrical faults (e.g. short-circuit to V_{batt}) into the signal lines and to attenuate the signal.

The six Automotive Ethernet channels including the fault injection circuits and the associated connectors are located on a piggyback board which can be plugged on the VT6306B. The two standard Ethernet channels are located on the base board. These channels can be used e.g. for media conversion.

19.2 Installation

Please follow the general installation instructions in chapter 2.1.2 Modules.

The Network Modul VT6306B is provided by the backplane with power and the control commands for the relays. The network interface itself is controlled via PCI Express. Therefore, connect the VT6306B using a PCI Express x1 cable to the Real-time Module VT6000. In order to install the VT6306B in a CANoe RT Rack, install a suitable PCIe 1x cable adapter (separate article) and connect the PCIe Express x1 cable to it.

If the VT6306B is connected to the VT6000 you must configure the VT6306B in the **Vector Hardware Configuration** of the VT6000. This can be done using a remote desktop connection started from CANoe.



Cross Reference

More information about the settings in CANoe can be found in the CANoe online help.

19.3 Usage

19.3.1 Basic Connection Scheme

The connectors located above the backplane on the rear of the module can be used to make the following connections:

- **Bus bar 1**
  The ECU's supply voltage and ground are typically connected to bus bar 1. This makes it possible to create short circuits to ground and V_{batt}. Just like bus bar 2, bus bar 1 can also be used for other purposes if short circuits to ground/ V_{batt} are not required.
- **Bus bar 2**
  Bus bar 2 can be used to create short circuits between the lines of different channels on the VT6306B. Short circuits to other ECU I/O lines are possible as well. In this case the bus connections a and b of all modules (also including other VT modules than the VT6306B) are interconnected.

> **Standard Ethernet connectors**
A standard ethernet cable can be connected to these RJ45 connectors in order to establish an Ethernet connection (e.g. for media conversion).

The connectors, located on the piggyback board and accessible on the rear of the module, can be used to make the following connections:

> **Automotive Ethernet connectors**
The Automotive Ethernet channels can be accessed with these connectors.
100BASE-T1piggy 1101:
Two channels are using one D-SUB9 connector in common. To access both channels on separate D-SUB9 connectors, a suitable Y-cable is available as separate accessory.
1000BASE-T1piggy 88Q2112:
Two channels are using one iX Industrial® connector in common. To access both channels on separate Automotive Ethernet connectors, suitable Y-cables are available as separate accessory.
VTpiggy 6AE1G 88Q2221M:
Two channels are using one iX Industrial® connector in common. To access both channels on separate Automotive Ethernet connectors, suitable Y-cables are available as separate accessory.

NOTICE!

Do not apply an AC voltage signal to the bus bars since the coupling capacitors will be shorted then and the transceiver may be damaged.

19.3.2 Signal Path Switching

The figure below shows the signal path and switching options of the 100BASE-T1piggy 1101, 1000BASE-T1piggy 88Q2112 and the VTpiggy 6AE1G 88Q2221M.

All six channels have basically the same structure. On the 100BASET1piggy 1101, the signal can additionally be attenuated by decreasing the resistance between line p and n on channel 1,2 and 3.

Note

The variation of the signal attenuation is only possible on channel 1,2 and 3 of the 100BASE-T1piggy 1101. In 1000BASE-T1 networks, signal attenuation can be realized by adding Gaussian white noise with a suitable 3rd party device, controlled by CANoe.

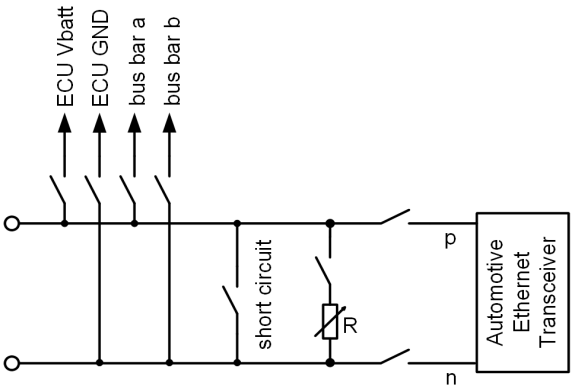

100BASE-T1piggy 1101

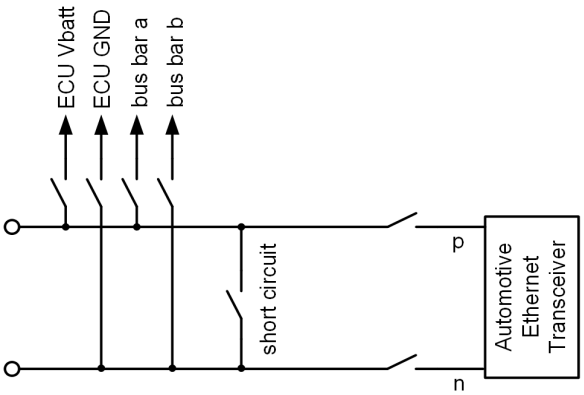

1000BASE-T1piggy 88Q2112 / VTpiggy 6AE1G 88Q2221M

Figure **134:** Signal paths and switching options

19.3.3 Signal Attenuation

The 100BASE-T1piggy allows an attenuation of the signal on channel 1, 2 and 3.

The signal can be attenuated by decreasing the resistance between line p and n. For this purpose, an adjustable resistor decade is provided on the piggyback board. The resistance of the decade can be adjusted or completely disabled via system variables from CANoe.

19.3.4 Using the Bus Bars

The VT6306B has two independent internal bus bars:

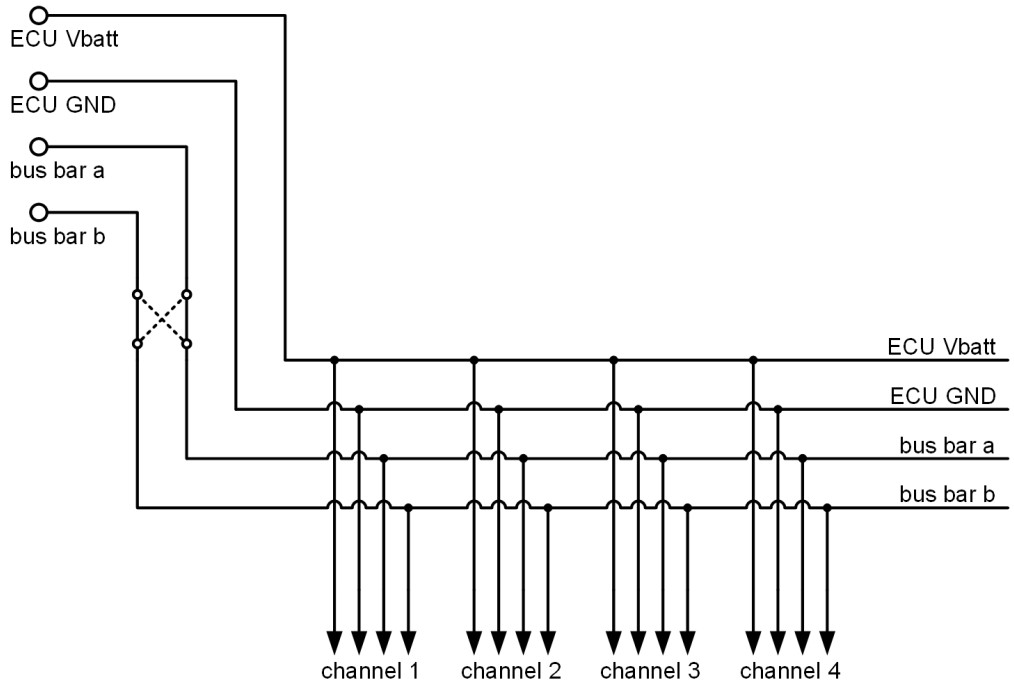

Figure **135:** Internal bus bars

Typically, one bus bar is connected to ECU V_{batt} and ECU ground. This makes it possible to generate short-circuits of channel lines to V_{batt} and ground. This bus bar may also be used for other purposes.

At the VT6306B, the two relays of each bus bar to switch the polarity of the bus bar (bus bar switch relays) can be switched independently. This allows, for instance, to apply the signal at bus bar connection b to both internal bus bar lines (relay a is switched → ab). For example, channel lines a and b can both be shorted to ground in this way.

The ECU Vbatt, ECU GND, bus bar a and bus bar b are protected by a 200 mA resettable polyfuse.

19.3.5 Displays

Activity (Ch1...Ch8)

LED illuminates if there is an Ethernet link or blinks if there is Ethernet activity at the according channel.

Color	Description
Green	1000 Mbit.
Yellow	100 Mbit.

Master (Ch1...Ch6)

A/B Multicolored channel LEDs which are indicating the configuration state of the channel's PHY. These LEDs are only available at the front panel of the VT6306B.

Color	Description
Green	PHY is configured as master.
Off	PHY is configured as slave.

Disturbed

This red LED indicates that at least one of the disturbance relays of the specific channel is active.

This is independent from the used transceiver piggyback. Therefore, the disturbance LED may show the activity of a disturbance relay that is not used by the actual transceiver piggyback.

Status

Multi-colored LED that indicates the status.

Color	Description
Green	Blinks 4x at power up and illuminates afterwards. Blinks quicker during an update progress. Please wait for the automatic reboot of the device (approx. 60 seconds) after the update has been finished.
Red	An error has occurred. Please switch on and off the power supply, wait for reboot of the device and then try again.

19.4 Network Interface Usage



Note

The operation of VT6306B requires Vector Tool Platform v2.0 or newer (100BASE-T1piggy) rsp. v2.5 or newer (1000BASE-T1piggy and VTpiggy 6AE1G 88Q2221M) and an

installed driver for the intel I210 Ethernet controller. In case of problems with operation on VT6000 or a Rack PC please ask the Vector Support for the latest flash image for your device.

19.4.1 Synchronization

Time stamps which are created during a measurement by devices of the Vector network interfaces (VT6306B, XL Family), can be synchronized by software or hardware.

The **software synchronization** is not supported with this module.

The **hardware synchronization** with maximum four other devices is realized by the SYNC-cable. The accuracy of the time stamp correction depends on the application and is typically 1 µs.

The devices to be synchronized must be interconnected by a party line (two-wire bus; signals: SYNC and GND). At each high-low edge of the sync line the Vector device generates a time stamp that is provided to the application via the driver. This allows the application to synchronize the time stamps of different devices to a common time base. The synchronization edges are created by the VT6306B.

Cross Reference

Please refer to the CANoe online help for further information about hardware synchronization with VT System.

Note

Hardware time synchronization must be activated in CANoe. For further information please refer to the CANoe online help. Please note that the time synchronization of the driver must be disabled, if multiple devices are interconnected via the synchronization line (see Vector Hardware Config -> **General information|Settings|Software time synchronization**).

19.5 Connectors

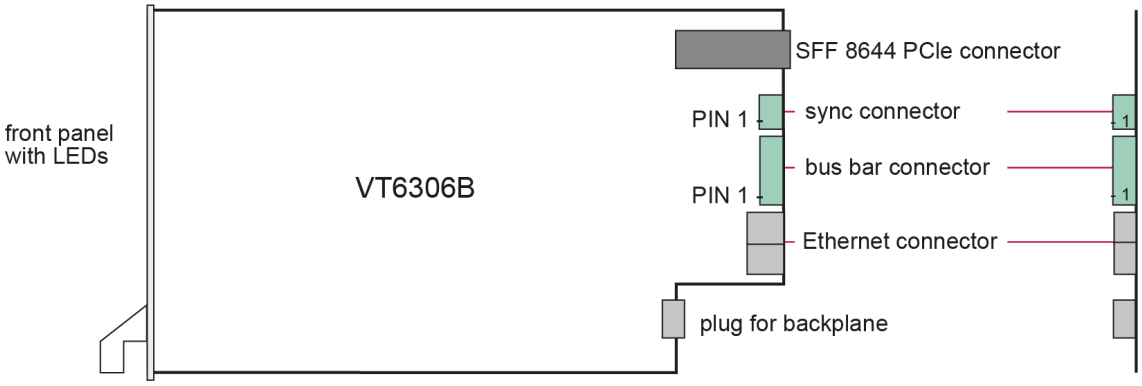

Figure **136:** Connectors

19.5.1 Bus Bar Connector

Plug type: Phoenix Contact MC 1,5/4-ST-3,81

Plug allocation (from top to bottom, viewed from the rear after installation):

Pin	Description
4	ECU V_{batt}
3	ECU ground
2	Bus bar, pin a
1	Bus bar, pin b

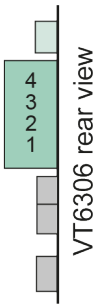

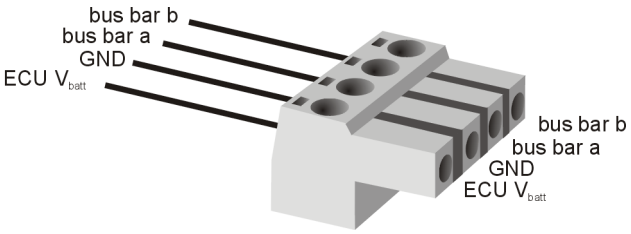

Figure **137:** Bus bar connector

19.5.2 Sync Connector

Plug type: Phoenix Contact MC 1,5/2-ST-3,81

Plug allocation (from top to bottom, viewed from the rear after installation):

Pin	Description
2	Ground
1	Sync signal

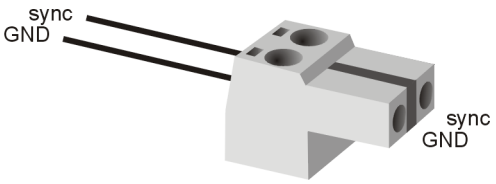

Figure **138:** Sync connector

19.5.3 Ethernet Connector

The Ethernet connector provides 2 standard RJ45 Ethernet sockets which can be used e.g. for media conversion.

19.6 Connectors 100BASE-T1piggy 1101

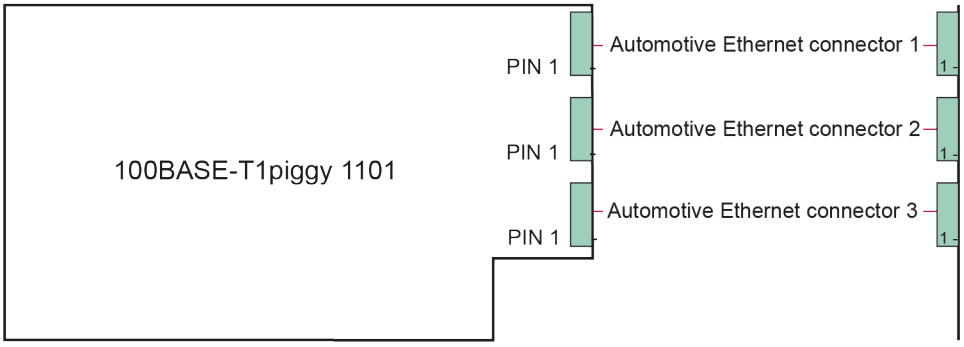

Figure **139:** Connectors

19.6.1 Automotive Ethernet Connector 1 (Channel 1 & 2)

Plug type: D-SUB9

Plug allocation of the D-SUB9 socket pin numbers:

Pin	Description
1	CH2 P
2	CH2 N
3	Not connected
4	CH1 P
5	CH1 N
6	Not connected
7	Not connected
8	Not connected
9	Not connected

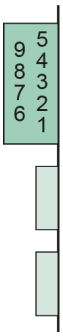

Note

Use the BRcable 2Y to access both channels on separate D-SUB9 connectors (see accessories manual, part number 05103).

19.6.2 Automotive Ethernet Connector 2 (Channel 3 & 4)

Plug type: D-SUB9

Plug allocation of the D-SUB9 socket pin numbers:

Pin	Description
1	CH4 P
2	CH4 N
3	Not connected
4	CH3 P
5	CH3 N
6	Not connected
7	Not connected
8	Not connected
9	Not connected

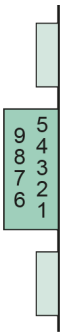

Note

Use the BRcable 2Y to access both channels on separate D-SUB9 connectors (see accessories manual, part number 05103).

19.6.3 Automotive Ethernet Connector 3 (Channel 5 & 6)

Plug type: D-SUB9

Plug allocation of the D-SUB9 socket pin numbers:

Pin	Description
1	CH6 P
2	CH6 N
3	Not connected
4	CH5 P
5	CH5 N

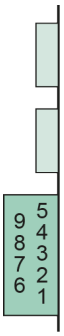

Pin	Description
6	Not connected
7	Not connected
8	Not connected
9	Not connected



Note

Use the BRcable 2Y to access both channels on separate D-SUB9 connectors (see accessories manual, part number 05103).

19.7 Connectors 1000BASE-T1piggy 88Q2112

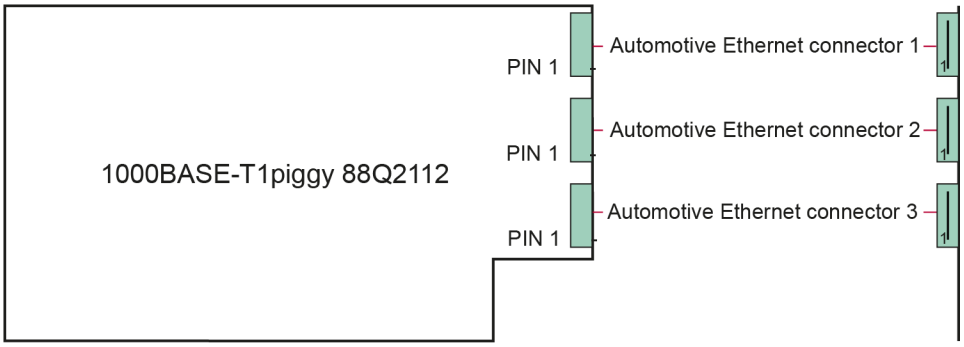

Figure **140:** Connectors

19.7.1 Automotive Ethernet Connector 1 (Channel 1 & 2)

Plug type: ix Industrial® connector (e. g. Harting ix Industrial® type 10A-1)

Plug allocation of the ix Industrial® socket pin numbers:

Pin	Description
1	CH2 P
2	CH2 N
3	Not connected
4	Not connected
5	Not connected
6	CH1 P
7	CH1 N
8	Not connected
9	Not connected
10	Not connected

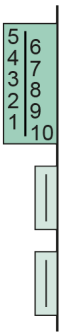

Note

Use an AEcable 2Y to access both channels on separate AE connectors (see accessories manual, part numbers: 05119, -24, -26, -28, -29, -31, -33, -34, -35, 36, -37, -38).

19.7.2 Automotive Ethernet Connector 2 (Channel 3 & 4)

Plug type: ix Industrial® connector (e. g. Harting ix Industrial® type 10A-1)

Plug allocation of the ix Industrial® socket pin numbers:

Pin	Description
1	CH4 P
2	CH4 N
3	Not connected
4	Not connected
5	Not connected
6	CH3 P
7	CH3 N
8	Not connected
9	Not connected
10	Not connected



Note

Use an AEcable 2Y to access both channels on separate AE connectors (see accessories manual, part numbers: 05119, -24, -26, -28, -29, -31, -33, -34, -35, 36, -37, -38).

19.7.3 Automotive Ethernet Connector 3 (Channel 5 & 6)

Plug type: ix Industrial® connector (e. g. Harting ix Industrial® type 10A-1)

Plug allocation of the ix Industrial® socket pin numbers:

Pin	Description
1	CH6 P
2	CH6 N
3	Not connected

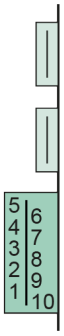

Pin	Description
4	Not connected
5	Not connected
6	CH5 P
7	CH5 N
8	Not connected
9	Not connected
10	Not connected



Note

Use an AEcable 2Y to access both channels on separate AE connectors (see accessories manual, part numbers: 05119, -24, -26, -28, -29, -31, -33, -34, -35, 36, -37, -38).

19.8 Connectors VTpiggy 6AE1G 88Q2221M

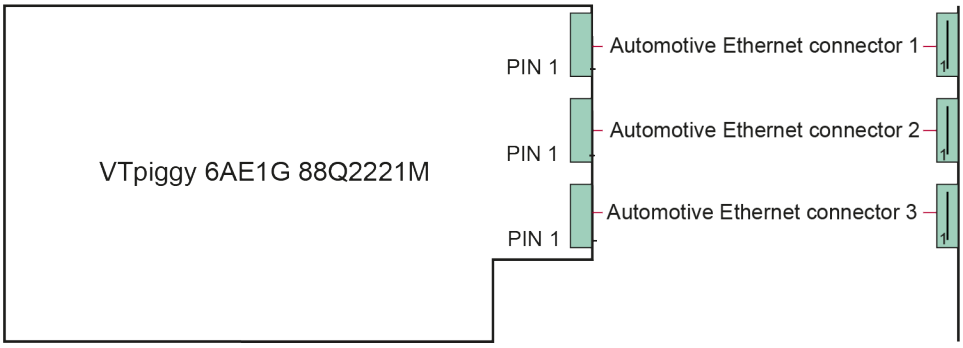

Figure **141:** Connectors

19.8.1 Automotive Ethernet Connector 1 (Channel 1 & 2)

Plug type: ix Industrial® connector (e. g. Harting ix Industrial® type 10A-1)

Plug allocation of the ix Industrial® socket pin numbers:

Pin	Description
1	CH2 P
2	CH2 N
3	Not connected
4	Not connected
5	Not connected
6	CH1 P
7	CH1 N
8	Not connected
9	Not connected
10	Not connected

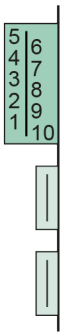

Note

Use an AEcable 2Y to access both channels on separate AE connectors (see accessories manual, part numbers: 05119, -24, -26, -28, -29, -31, -33, -34, -35, 36, -37, -38).

19.8.2 Automotive Ethernet Connector 2 (Channel 3 & 4)

Plug type: ix Industrial® connector (e. g. Harting ix Industrial® type 10A-1)

Plug allocation of the ix Industrial® socket pin numbers:

Pin	Description
1	CH4 P
2	CH4 N
3	Not connected
4	Not connected
5	Not connected
6	CH3 P
7	CH3 N
8	Not connected
9	Not connected
10	Not connected



Note

Use an AEcable 2Y to access both channels on separate AE connectors (see accessories manual, part numbers: 05119, -24, -26, -28, -29, -31, -33, -34, -35, 36, -37, -38).

19.8.3 Automotive Ethernet Connector 3 (Channel 5 & 6)

Plug type: ix Industrial® connector (e. g. Harting ix Industrial® type 10A-1)

Plug allocation of the ix Industrial® socket pin numbers:

Pin	Description
1	CH6 P
2	CH6 N
3	Not connected

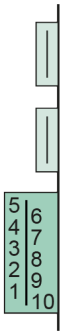

Pin	Description
4	Not connected
5	Not connected
6	CH5 P
7	CH5 N
8	Not connected
9	Not connected
10	Not connected



Note

Use an AEcable 2Y to access both channels on separate AE connectors (see accessories manual, part numbers: 05119, -24, -26, -28, -29, -31, -33, -34, -35, 36, -37, -38).

19.9 Technical Data VT6306B

19.9.1 General

Parameter	Min.	Typ.	Max.	Unit
Supply voltage (via the backplane)	10.8	12	13.2	V
Power consumption > with 100BASE-T1piggy 1101 > with 1000BASE-T1piggy 88Q2112 > with VTpiggy 6AE1G 88Q2221M		 13 15 15		 W W W
Temperature range (Operation)	0		+55	°C
Temperature range (Storage)	-40		+85	°C
Dimensions (length × width × depth)	300 x 173 x 36			mm
Total weight > incl. 100BASE-T1piggy 1101 > incl. 1000BASE-T1piggy 88Q2112 > incl. VTpiggy 6AE1G 88Q2221M	 approx. 730 approx. 603 approx. 603			 g g g

19.9.2 Signals and Switching

Parameter	Min.	Typ.	Max.	Unit
Voltage at bus bars (against DGND)				
> 100BASE-T1-piggy 1101	-60		+60	V
> 1000BASE-T1-piggy 88Q2112	-30		+30	V
> VTpiggy 6AE1G 88Q2221M	-30		+30	V
Current into bus bars				
> 100BASE-T1-piggy 1101			200	mA
> 1000BASE-T1-piggy 88Q2112			200	mA
> VTpiggy 6AE1G 88Q2221M			200	mA

19.9.3 Ethernet Interfaces

VT6306B Base Board

Parameter	Specification
Standard Ethernet (2 channels) > Transceiver type > Supported protocols	 Atheros AR8031 IEEE 100BASE-TX/1000BASE-T
Time stamps > Resolution > Accuracy (in device) > Accuracy hardware sync	 1 ns 1 µs Typ. 1 µs
Required operating system	Windows 7 SP1 (32 bit) or higher
On-board package generator	Supported (see CANoe help for further details)

100BASE-T1piggy 1101

Parameter	Specification
Automotive Ethernet (6 channels) > Transceiver type > Supported protocol	 NXP TJA1101 (6x) IEEE 100BASE-T1

Features Open Alliance SIG:

TC8	Shorts between p and n signal line
	Line breaks on p and n signal line
	Attenuation resistors (channel 1-3) > range 5 Ω ... 2555 Ω > step width 5 Ω
	Separate Power on/off for each transceiver (support beginning with CANoe 12.0 SP)
TC10	Sleep/Wake-up (support beginning with CANoe 12.0 SP)

1000BASE-T1piggy 88Q2112

Parameter	Specification
Automotive Ethernet (6 channels) > Transceiver type > Supported protocol	 Marvell 88Q2112 (6x) IEEE 100BASE-T1 and IEEE 1000BASE-T1

Features Open Alliance SIG:

TC8	Shorts between p and n signal line
	Line breaks on p and n signal line

VTpiggy 6AE1G 88Q2221M

Parameter	Specification
Automotive Ethernet (6 channels) > Transceiver type > Supported protocol	 Marvell 88Q2221M (6x) IEEE 100BASE-T1 and IEEE 1000BASE-T1

Features Open Alliance SIG:

TC8	Shorts between p and n signal line
	Line breaks on p and n signal line
TC10	Sleep/Wake-up
Security	MACsec IEEE 802.1AE

20 VT7001A/VT7101 – Power Module

In this chapter you find the following information:

20.1 Purpose ... **291**
20.1.1 VT7001A ... 291
20.1.2 VT7101 ... 291
20.2 Installation ... **291**
20.3 Usage ... **291**
20.3.1 Basic Connection Scheme ... 291
20.3.2 Signal Path Switching ... 293
20.3.3 External Power Supplies ... 293
20.3.4 Internal Power Supply ... 294
20.3.5 Outputs ... 294
20.3.6 Measuring Current and Voltage ... 294
20.3.7 Hardware Synchronization ... 295
20.3.8 Ground Connection ... 296
20.3.9 Displays ... 296
20.4 Connectors ... **298**
20.4.1 Auxiliary and Bus Bar Output Connector ... 300
20.4.2 Control Voltage Connector ... 300
20.4.3 ECU and External Power Supply Connector ... 301
20.4.4 Sync Connector ... 302
20.4.5 Serial Interface Connectors ... 302
20.5 Technical Data VT7001A ... **303**
20.5.1 General ... 303
20.5.2 Input Signals and Switches ... 304
20.5.3 Internal Power Supply ... 304
20.5.4 Control Voltages for External Power Supplies ... 305
20.5.5 Current Measurement ... 306
20.5.6 Voltage Measurement ... 306
20.6 Technical Data VT7101 ... **307**
20.6.1 General ... 307
20.6.2 Input Signals and Switches ... 307
20.6.3 Internal Power Supply ... 307
20.6.4 Control Voltages for External Power Supplies ... 308
20.6.5 Current Measurement ... 308

20.6.6 Voltage Measurement 310

20.1 Purpose

20.1.1 VT7001A

The Power Module VT7001A is used to feed the power supply inputs of an ECU under test (terminal 15 and 30). The module controls one or two external power supplies and delivers their output power to the power inputs of the ECU. The VT7001A measures the current and voltage of the supplied power. It is able to switch on and off power and to generate several error situations (e.g. short circuit on a power line or ground shift).

The VT7001A contains also an internal power supply that generates a supply voltage for the ECU under test from the VT System supply voltage. The voltage range, the accuracy of the output voltage, and the output current is limited. Often this is sufficient to supply a small ECU in normal operation mode without the need of an external power supply.

20.1.2 VT7101

The Power Module VT7101 is a 60 V capable Version of the VT7001A. Therefore, to all load carrying relays a solid state relay was added and the measurement ranges were changed accordingly.

20.2 Installation

Please follow the general installation instructions in chapter 2.1.2 Modules.



Note

Please regard the maximum power consumption of all modules inserted in one backplane if you use the internal power supply of the VT7001A/VT7101. The overall power consumption must not exceed the maximum power rating of the used backplane (refer to technical data).

20.3 Usage

20.3.1 Basic Connection Scheme

The connectors located above the backplane on the rear of the module can be used to make the following connections:

- **Connecting the ECU**
  The ECU power supply inputs can be connected to the two outputs of the VT7001A/VT7101. Typically the two power supply inputs terminal 15 and terminal 30 as well as the ground line (terminal 31) are connected to OUT1, OUT2, and GND of OUT1. But other configurations can be used as well.
- **Connecting external power supplies** (optional)
  Up to two external power supplies can be connected using the two power supply inputs of the VT7001A/VT7101. The main difference between them is the ability of power supply input 2 to swap the two input lines internally to generate a negative supply voltage.
- **Connecting V_{batt}/ECU ground to bus bar**
  Bus bar 1 is typically connected to the ECU's supply voltage (V_{batt}) and ECU ground. This is mandatory for VT2516A and recommended for other modules, e.g. to perform short circuits to V_{batt} and ground.
  The VT7001A/VT7101 has a dedicated output of V_{batt} and ground for the bus bar. The output is

derived from OUT1 of the VT7001A/VT7101 but it has its own plug to make wiring easier. Additionally, V_{batt} is fused by a 4 A poly fuse to limit overcurrent on the bus bar lines.

> **Connecting additional (auxiliary) devices** (optional):
The VT7001A/VT7101 provides two additional outputs for auxiliary devices. The outputs are derived from OUT1 respectively from OUT2, but currents of the auxiliary outputs are not measured. Thus, current measurement comprises ECU current but not current for auxiliary devices.

> **Controlling power supplies by control voltage** (optional):
Voltage and current limitation of the two external power supplies can be controlled by a control voltage generated by the VT7001A/VT7101.



Note

The control voltage outputs of the VT7001A/VT7101 are electrically isolated.

> **Controlling power supplies by serial interface** (optional):
External power supplies may also be controlled via a serial connection. The two serial interface outputs are DC-isolated. The connection can be realized by a ribbon cable and an appropriate D-Sub-9 to ribbon cable connector. Please check pin assignment because there are several different types of connectors.

> **Connecting sync line to Vector network interfaces** (optional):
The VT System can be connected to Vector network interfaces using their sync line. Use the Vector sync cable. Remove plug at one end and assemble the Phoenix connector of the VT7001A/VT7101 to this end of the cable (lines sync and ground).
Only the first VT7001A/VT7101 of a VT System test system can be connected to the sync line. This synchronizes the complete VT System because all modules of the VT System are synchronized internally with each other.

> **Connecting an external display** (optional):
An additional serial interface is provided to connect to an external display (e.g. for displaying actual current and voltage of the outputs). The serial interface is not DC-isolated. +12 V is provided at the connector to supply the display. The display must not use more than 200 mA from this supply voltage (not fused!).



NOTICE!

Regard the additional +12 V lines on the plug when using standard serial connectors and cables.

The cabling is done using Phoenix connectors, making it easy to switch them around. The test system can therefore be easily used for different ECUs, simply by connecting a different ECU cable (connecting the VT module to the ECU to be tested).

20.3.2 Signal Path Switching

The figure below shows the various signal paths and switching options for the VT7001A/VT7101.

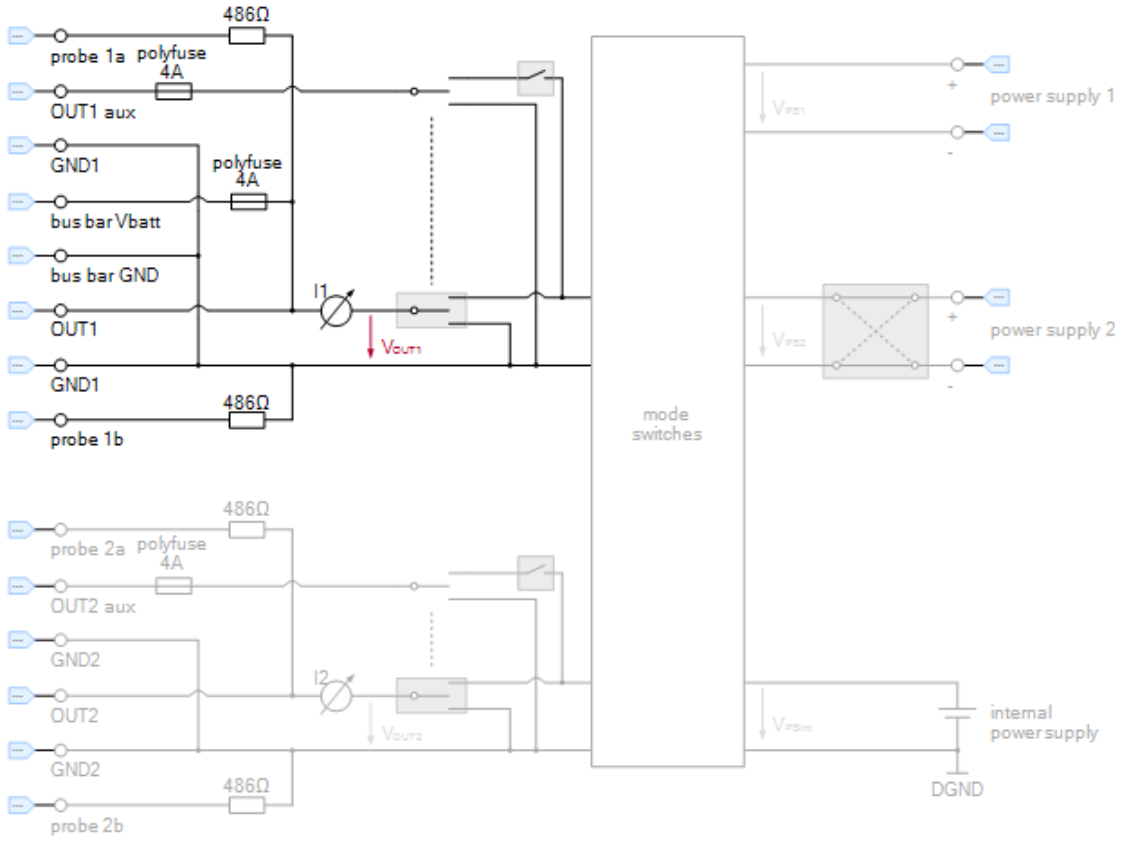

Figure **142:** Signal paths and switching options

20.3.3 External Power Supplies

You can connect two external power supplies to the VT7001A/VT7101.

Control voltages that let you define the power supply's output voltage and current limit (i.e. the maximum output current of the power supply) are available for each of the two power supplies.

Alternatively, the power supplies may be controlled via a serial interface. Thus, the VT7001A/VT7101 provides two DC-isolated serial interfaces for this purpose.

NOTICE!

- The external power supplies have to ensure adequate current limitation because the VT7001A/VT7101 does not contain fuses.
- The external power supplies can have an higher output voltage as the VT7001A/VT7101 specified input voltage which can damage the VT7001A/VT7101. Please take care of the factor (Ref voltage factor) to determine the control voltage from the defined power supply output voltage. The factor is given by the external power supply. This factor is the ratio of the control voltage to the output voltage.

20.3.4 Internal Power Supply

The VT7001A/VT7101 provides a third, internal power supply. This is fed by the VT System's power supply. It provides up to 2 A but does not have an adjustable current limiter.

The internal power supply is especially useful for powering less power-intensive ECUs when there are no special power supply requirements.

20.3.5 Outputs

The VT7001A/VT7101 has two separate outputs (OUT1 and OUT2) that each have their own ground line (GND1 and GND2). A variety of configurations can be achieved by combining these with the three power supplies (two external, one internal). In particular, you can control the ECU's two power supply inputs (terminal 15 and terminal 30) separately. You can also connect two different ECUs, carry out measurements with ground offset or V_{batt} offset, etc.

There are also two auxiliary outputs, OUT1 aux and OUT2 aux. These correspond to OUT1 and OUT2, but are not included in the measurements. You can make separate connections to them, as their purpose is to supply power to any additional components that may be needed. While these additional connections are fed from the same operating voltage, they should not add to the ECU's power consumption.

An additional connection (OUT1 bus bar) lets you connect V_{batt} to the other VT modules (via bus bar 1 or dedicated connections).



NOTICE!

The power supply channels are switched on and off on both poles (power supply and GND). In certain configurations, this may result in compensation/equalization currents caused by different ground potentials between connected devices.

To minimize the risk of unintended current flow, the ground paths should be bridged where applicable to establish a defined common ground reference.

20.3.6 Measuring Current and Voltage

The output current is measured at the two outputs, OUT1 and OUT2, and made available to CANoe as an average value via the corresponding system variables. The current is measured in seven current ranges (maximum current 100 A to 100 µA). Switching between ranges happens automatically. This wide current range makes it possible to differentiate precisely between the ECU's different operating and load states, especially when detecting energy saving states (sleep mode).

The input voltages are measured at the power supplies inputs and at the outputs and are made available to test cases in CANoe via the corresponding system variables.



NOTICE!

The VT7001A/VT7101 does not contain fuses to protect the module from overcurrent damages. Therefore, the external power supplies have to ensure adequate current limitation. Although the module switches off the power lines when current exceeds 70 A, this is not a reliable overcurrent protection. Switching off is delayed to allow high currents for a short period of time.

20.3.7 Hardware Synchronization

All modules in a VT System are synchronized internally. The VT System is synchronized with the Vector network interface via CANoe. You can use hardware synchronization to further improve synchronization between the VT System and the network interfaces. The VT System can be integrated into the hardware time synchronization recognized by the Vector network interfaces via the VT7001A/VT7101.

20.3.8 Ground Connection

The ground line of output 1 has to be used as the main ECU ground potential for the system (ECU GND). All measurements are based to this potential (as a reference potential, called AGND). For the VT System the following rules regarding ground are important:

- ECU ground, i.e. the ground line of the voltage that supplies the ECU under test, must be connected to AGND. This should be done at exactly one point to avoid problems due to ground loops.
- AGND must be connected to DGND. To avoid ground loops this should also be done at only one point.

Without a VT7001A/VT7101, AGND is connected at the backplane power connector. AGND and DGND should typically be connected within the connector.

If a VT7001A/VT7101 is used, this is not necessary. In the first VT7001A/VT7101 in the system AGND is automatically connected to ground of OUT1. Therefore, use OUT1 ground as your main ECU ground. No connection between AGND and DGND in the power connector of the backplane is needed in this case.



NOTICE!

Please check these ground conditions carefully before using the system. Failures may affect measurement or damage some VT System modules!

20.3.9 Displays

Relay Switching

The current state of the relay switching for the two power outputs to the ECU is indicated by LEDs on the front panel.

LED	Description
Internal Supply	...lights up when the output is sourced by the internal power supply
Supply 1	...lights up when the output is sourced by the external power supply 1
Supply 2	...lights up when the output is sourced by the external power supply 2
Ground	...lights up when ground output is not interrupted

Positive/Negative Voltage

For both outputs, there are two LEDs on the front panel that indicate whether the output voltage (referencing to the ground pin) is positive or negative. These two LEDs are located between the two measurement connectors:

LED	Description
RED LED	Positive voltage greater than +3 V is applied

LED	Description
BLUE LED	Negative voltage below -3 V is applied
RED and BLUE LED	If mixed signals with components greater than +3 V and less than -3 V are applied, both LEDs light up.

Bar Graph for Voltage and Current

Bar Graph	Description
Voltage	Gives an indication of the actual output voltage
Current	Gives an indication of the actual output current

Error Messages

LED	Description
Internal Supply	...blinks when voltage setting for internal power supply differs from actual output voltage (+/- 1 V). It also blinks and additional the measurement in CANoe is stopped when an overload of the internal power supply is detected. This state is exited only after measurement in CANoe has been switched off and on again.
Supply 1	...blinks when control voltage setting for power supply 1 differs from actual input voltage at power supply 1 input (+/- 1 V).
Supply 2	...blinks when control voltage setting for power supply 2 differs from actual input voltage at power supply 2 input (+/- 1 V).
Both polarity LEDs	...blink when the fuse of the auxiliary or the bus bar output is defective. This state is exited only after measurement in CANoe has been switched off and on again.
Bar graph current	...blinks when overcurrent at the output is detected (> 75 A). This state is exited only after measurement in CANoe has been switched off and on again.

20.4 Connectors

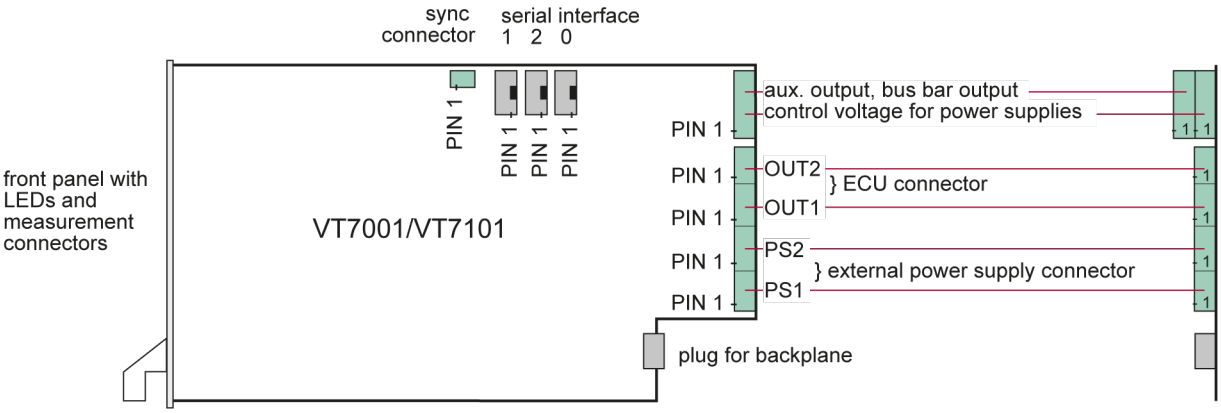

Figure **143:** Connectors

Serial interface 1 and 2 belongs to power supply 1 and 2. Serial interface 0 is an additional general serial interface, e.g. for a display. Logically it belongs to the whole module.

20.4.1 Auxiliary and Bus Bar Output Connector

Plug type: Phoenix Contact MC 1,5/6-ST-3,81

Plug allocation (from top to bottom, viewed from the rear after installation):

Pin	Description
6	OUT 1 bus bar, V_{batt} for bus bar 1
5	GND 1, ground for bus bar 1
4	OUT 2 aux
3	GND 2
2	OUT 1 aux
1	GND 1

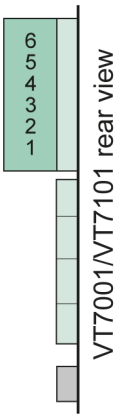

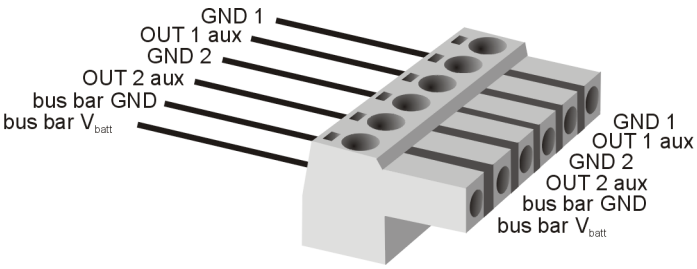

Figure **144:** Auxiliary and bus bar output connector

20.4.2 Control Voltage Connector

Plug type: Phoenix Contact MC 1,5/6-ST-3,81

Plug allocation (from top to bottom, viewed from the rear after installation):

Pin	Description
6	Control voltage for max. current of power supply 2
5	Control voltage for voltage of power supply 2
4	Ground
3	Control voltage for max. current of power supply 1
2	Control voltage for voltage of power supply 1
1	Ground

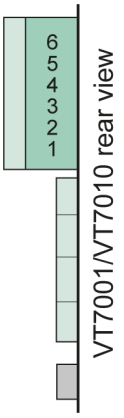

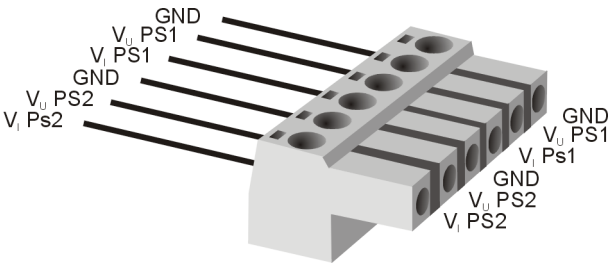

Figure **145:** Control voltage connector

20.4.3 ECU and External Power Supply Connector

Plug type: Phoenix Contact PC 16/2-ST-10,16

Plug allocation (from top to bottom, viewed from the rear after installation):

Pin	Description
2	OUT 2
1	GND 2

Pin	Description
2	OUT 1
1	GND 1

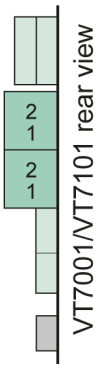

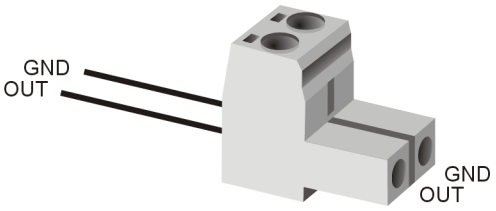

Figure **146:** ECU connector

Pin	Description
2	Power supply 2, input +
1	Power supply 2, input -

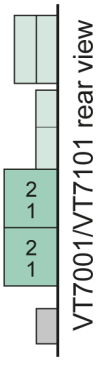

Pin	Description
2	Power supply 1, input +
1	Power supply 1, input -

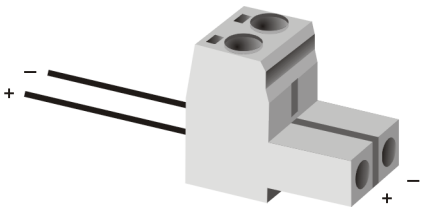

Figure **147:** External power supply connector

20.4.4 Sync Connector

Plug type: Phoenix Contact MC 1,5/2-ST-3,81

Plug allocation (from left to right):

Pin	Description
2	Ground
1	Sync signal

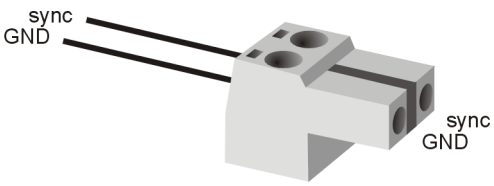

Figure **148:** Sync connector

20.4.5 Serial Interface Connectors

Serial interface for power supply 1 and 2 (DC-isolated)

Pin	Description
3	Rx – receive data input
5	Tx – transmit data output
9	Ground

Serial interface for display

Pin	Description
3	Rx – receive data input
5	Tx – transmit data output
4, 7, 10	+ 12 V from backplane (max. 200 mA, not fused!)
9	Ground

An interface cable to a PC-like DB9 connector (male) can easily be created using ribbon cable connectors. In this case the Rx pin is assigned to pin 2 of the DB9 male connector, Tx to pin 3, ground to pin 5. This is the typical assignment of serial interface connectors at a PC.

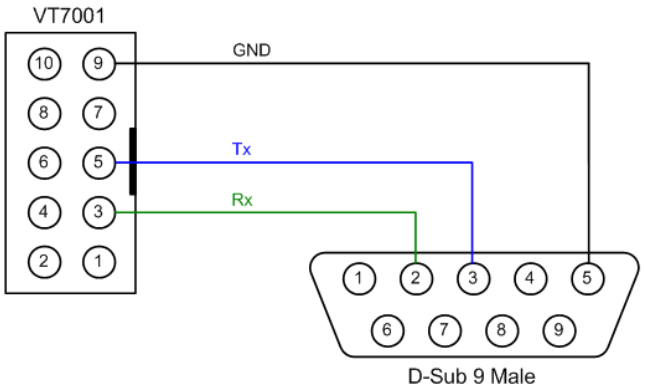

Figure **149:** Typical assignment of serial interface connectors at a PC

Note

Complete cables are also offered at the PC accessory market. But there are two variants with different pin assignments on the market. Therefore, please check the pin assignment carefully.

A suitable connector is, for example, the **Würth Elektronik WR-BHD Female IDC Connector** (part number: 61201023021), featuring 10-pin, 2.54 mm pitch, and with strain relief. Ensure correct conductor orientation and pin assignment according to the wiring diagram shown above.

20.5 Technical Data VT7001A

20.5.1 General

Parameter	Min.	Typ.	Max.	Unit
Supply voltage (via the backplane)	10.8	12	13.2	V

Parameter	Min.	Typ.	Max.	Unit
Power consumption at 12.0 V > all relays off > 8 relays switched on, output 12 V/1 A via internal power supply		 7 33		 W W
Temperature range	0		+55	°C
Dimensions (length × width × depth)	300 x 173 x 36			mm
Total weight	approx. 1240			g

20.5.2 Input Signals and Switches

Parameter	Min.	Typ.	Max.	Unit
Input voltage > power supply input + against – > ECU output + against – (e.g. in case of short circuit)	 -40 -40		 +40 +40	 V V
Impedance > power supply input against ground	 1		 200	 MΩ
Current carrying capacity (at 0 ... 35 °C) > only one channel used > both channels in sum			 70 100	 A A

20.5.3 Internal Power Supply

Parameter	Min.	Typ.	Max.	Unit
Output voltage range	3		30	V
Accuracy at 23±5°C, ±(% of value + offset) > at output current ≤ 0.5 A > at output current ≤ 2 A	 -(2.0+100 mV) -(2.0+400 mV)		 +(2.0+100mV) +(2.0+400mV)	
Output current > at output voltage ≤ 30 V > at output voltage ≤ 15 V			 0.5 2.0	 A A
Timing > Rise time (27 Ω) > Fall time (27 Ω)	 60 1.7			 V/ms V/ms

20.5.4 Control Voltages for External Power Supplies

Parameter	Min.	Typ.	Max.	Unit
Control voltage range (outputs are electrically isolated) > for setting voltage > for setting current limitation	 -10 -10		 +10 +10	 V V
Output current	3		30	mA
D/A converter > Resolution > Settling time (from zero to full scale)			 14 0.5	 Bits µs
Accuracy at 23±5°C, ±(% of value + offset)	-(0.05+40 mV)		+(0.05+40 mV)	

20.5.5 Current Measurement

Parameter	Min.	Typ.	Max.	Unit
Current ranges (automatically switched)		7		
A/D converter > Resolution > Sample rate for raw data (per channel)		 16 250		 Bits kSamples/s
Accuracy at 23±5°C, ±(% of value + offset) > current range ≤ 100 µA (1 kΩ) > current range ≤ 1 mA (100 Ω) > current range ≤ 10 mA (10 Ω) > current range ≤ 100 mA (1 Ω) > current range ≤ 1 A (100 mΩ) > current range ≤ 10 A (10 mΩ) > current range ≤ 100 A (1 mΩ)	 -(0.5+5 µA) -(0.5+15 µA) -(0.5+150 µA) -(0.5+1.5 mA) -(0.5+15 mA) -(0.5+150 mA) -(0.5+500 mA)		 +(0.5+5 µA) +(0.5+15 µA) +(0.5+150 µA) +(0.5+1.5 mA) +(0.5+15 mA) +(0.5+150 mA) +(0.5+500 mA)	

20.5.6 Voltage Measurement

Parameter	Min.	Typ.	Max.	Unit
Measurement range	-40		+40	Accuracy at 23±5°C, ±(% of value + offset)
A/D converter > Resolution > Sample rate for raw data (per channel)		 16 250		 Bits kSamples/s
Accuracy at 23±5°C, ±(% of value + offset)	-(1.2+120 mV)		+(1.2+120 mV)	

The accuracy of a measured voltage depends on two parts (% of value + offset). The first part (relative value) depends on the measured value; the second part (absolute value) is a fixed offset voltage.

As an example, if you measure a voltage of -5 V, you get an accuracy of ±180 mV (1.2 % of 5 V + 120 mV).

20.6 Technical Data VT7101

20.6.1 General

Parameter	Min.	Typ.	Max.	Unit
Supply voltage (via the backplane)	10.8	12	13.2	V
Power consumption at 12.0 V > all relays off > 8 relays switched on, output 12 V/1 A via internal power supply		 7 33		 W W
Temperature range	0		+55	°C
Dimensions (length × width × depth)	300 x 173 x 36			mm
Total weight	approx. 1300			g

20.6.2 Input Signals and Switches

Parameter	Min.	Typ.	Max.	Unit
Input voltage > power supply input + against – > ECU output + against – (e.g. in case of short circuit)	 -60 -60		 +60 +60	 V V
Impedance > power supply input against ground	 1		 200	 MΩ
Current carrying capacity (at 0 ... 35 °C) > only one channel used > both channels in sum			 70 100	 A A



NOTICE!

Suitable measures to prevent inrush currents higher then the maximum rating of the channels (70 A) need to be implemented.

20.6.3 Internal Power Supply

Parameter	Min.	Typ.	Max.	Unit
Output voltage range	3		59	V

Parameter	Min.	Typ.	Max.	Unit
Accuracy at 23±5°C, ±(% of value + offset) > at output current ≤ 0.5 A	 -(0.5+100 mV)		 +(0.5+100 mV)	
Maximum output > Current > Power			 2.0 30	 A W
Timing > Rise time > Fall time		 50 20		 V/ms V/ms

20.6.4 Control Voltages for External Power Supplies

Parameter	Min.	Typ.	Max.	Unit
Control voltage range (outputs are electrically isolated) > for setting voltage > for setting current limitation	 -10 -10		 +10 +10	 V V
Output current	3		30	mA
D/A converter > Resolution > Settling time (from zero to full scale)			 14 0.5	 Bits µs
Accuracy at 23±5°C, ±(% of value + offset)	-(0.01+10 mV)		+(0.01+10 mV)	

20.6.5 Current Measurement

Parameter	Min.	Typ.	Max.	Unit
Current ranges (automatically switched)		7		
A/D converter > Resolution > Sample rate for raw data (per channel)		 16 250		 Bits kSamples/s

Parameter	Min.	Typ.	Max.	Unit
Accuracy at 23±5°C, ±(% of value + offset) > current range ≤ 100 µA (1 kΩ) > current range ≤ 1 mA (100 Ω) > current range ≤ 10 mA (10 Ω) > current range ≤ 100 mA (1 Ω) > current range ≤ 1 A (100 mΩ) > current range ≤ 10 A (10 mΩ) > current range ≤ 100 A (1 mΩ)	 -(0.1+3 µA) -(0.1+5 µA) -(0.1+50 µA) -(0.1+0.5 mA) -(0.1+5 mA) -(0.1+50 mA) -(0.1+200 mA)		 +(0.1+3 µA) +(0.1+5 µA) +(0.1+50 µA) +(0.1+0.5 mA) +(0.1+5 mA) +(0.1+50 mA) +(0.1+200 mA)	

20.6.6 Voltage Measurement

Parameter	Min.	Typ.	Max.	Unit
Measurement range	-60		+60	V
A/D converter > Resolution > Sample rate for raw data (per channel)		 16 250		 Bits kSamples/s
Accuracy at 23±5°C, ±(% of value + offset)	-(0.5+25 mV)		+(0.5+25 mV)	

The accuracy of a measured voltage depends on two parts (% of value + offset). The first part (relative value) depends on the measured value; the second part (absolute value) is a fixed offset voltage.

As an example, if you measure a voltage of -5 V, you get an accuracy of ±180 mV (1.2 % of 5 V + 120 mV).

21 VT78xx – Application Boards

In this chapter you find the following information:

21.1 Installation **312**
21.2 Application Board Configuration **312**
21.3 Display **312**
21.4 System Variables **312**
21.5 VT7820 ..... **313**
21.5.1 Purpose 313
21.5.2 Usage 314
21.5.3 Error Simulation 316
21.5.4 Constant Output 316
21.5.5 Connectors 317
21.5.6 Technical Data VT7820 318
21.6 VT7852 ..... **320**
21.6.1 Purpose 320
21.6.2 Usage 320
21.6.3 Connectors 320
21.6.4 Technical Data VT7852 322
21.7 VT7880 - GB/T CHAdeMO **324**
21.7.1 Purpose 324
21.7.2 Usage 324
21.7.3 Connectors 330
21.7.4 Technical Data VT7880 334

21.1 Installation



Note

To use a VT78xx application board a VT790xA extension module is required.

First, plug-in the application board on the VT790xA and screw both boards together using distance bolts. The combined VT7900A and application board can now be handled like every other VT System module.

Please follow the general installation instructions in chapter 2.1.2 Modules.

To make the VT790xA with VT78xx available in CANoe,you must start CANoe once with the combo board connected. During startup, the module description is automatically detected and imported.

If CANoe was already running during the installation, it must be restarted once so that the module description can be imported properly.

21.2 Application Board Configuration

Each VT78xx is supplied with a valid configuration. The VT System Application Board Configurator can be used to read and modify the configuration.



Cross Reference

For detailed instructions on using the VT System Application Board Configurator, please refer to the corresponding help documentation

21.3 Display

The LEDs on the front panel of the main module VT7900A FPGA are not used for this application.

21.4 System Variables



Cross Reference

A complete list of all system variables can be found in the Knowledge Base Article KB0023603.

21.5 VT7820

21.5.1 Purpose

The VT7820 is a module for simulating digital rotational sensors. It is an application board which is mounted on the VT7900A FPGA extension module. The module can simulate voltage and current based sensors and has the following features:

- Electrically isolated from the remaining VT System Output Currents from 0 A to 100 mA
- Output Voltage from -12 V to +12 V
- Output Sampling Rate up to 2.16 MSamples/s
- Break and Shortcircuit Relays

Sensor Types

Several wheel speed sensor types are directly supported by the firmware.

The following sensor types are supported:

- **s-Type**: output is a simple PWM which has a fixed duty cycle and directly correlates to the wheel speed. No additional information is provided.
- **i-Type**: output is a signal with two logical levels. The sensor generates a high pulse after each detected magnetic signal edge, therefore the signal frequency of the “i” mode is two times the signal frequency of the “s” mode. The high time of the signal is kept constant and gives additional information, e.g.the direction of the rotation or information about the assembly position.
- **v-Type**: gives a three level data signal. The signal consists of a sync pulse followed by nine bits of data. The data consists of the direction of the rotation, several bits to detect assembly errors and a parity bit. The amplitude of the sync pulse is typically twice the amplitude of the data bits. The sensor generates a sync pulse and an output datagram at each magnetic signal edge, therefore the signal frequency of the “v” mode is two times the signal frequency of the “s” mode.
- **Crank and Camshaft**: output is identical to S-Type sensor but all channels use the wheel speed of channel 1 and are synchronized. With this configuration, mechanically correlated sensors like camshaft and crankshaft sensors can be simulated. If a fixed factor between the frequency of two channels is needed this can be done by adjusting the number of teeth for each channel.

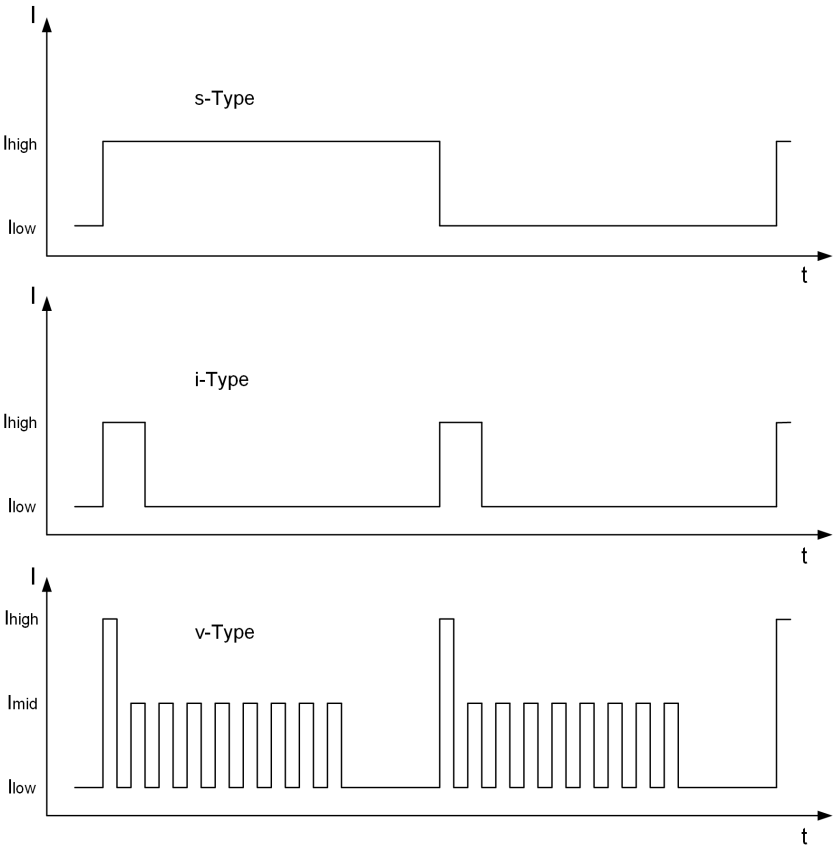

Figure **150:** Supported sensor types

21.5.2 Usage

21.5.2.1 Basic Connection Scheme

For simulating rotational sensors the following signals can be connected.

> **Connecting of current signal**

To connect the VT7820 to an ECU simply connect the output pins ECU+ and ECU-. In current mode ECU+ typically is connected to the supply voltage of the ECU and ECU- is connected to the sensor input of the ECU. The ECU sensor input typically has a load resistor which enables the ECU to convert the current coming from the sensor back to a measurable voltage.

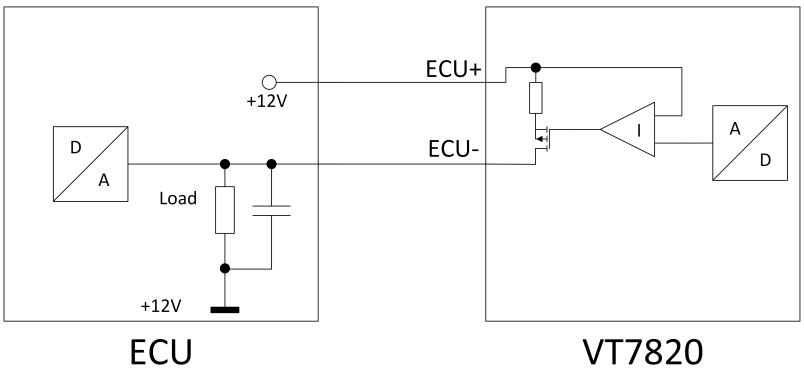

> **Connecting of voltage signal**

To connect the VT7820 to an ECU simply connect the output pins ECU+ and ECU-. In voltage mode ECU- typically is connected to the ECU ground or a similar reference potential. ECU+ is then connected to the sensor input of the ECU.

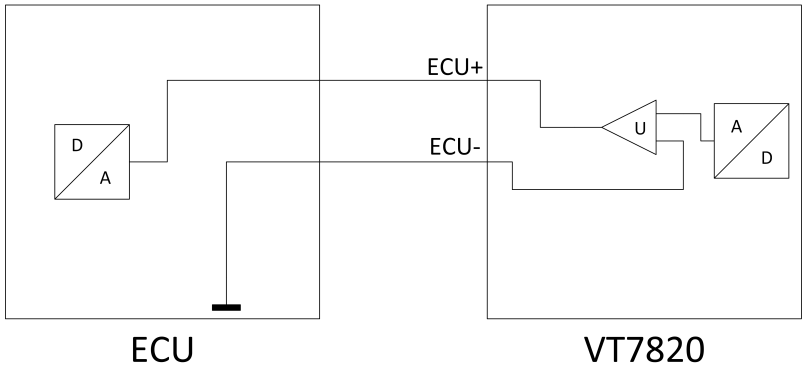

CAUTION!

This application board (signals, supply voltages and ground) is electrically isolated from the remaining VT System. So care has to be taken when connecting external measurement devices (e.g. oscilloscope) that no ground connection to the VT System is established via the power network. It is recommended to use an isolation transformer.

21.5.2.2 Signal Path Switching

The figure below shows the signal paths and switching options.

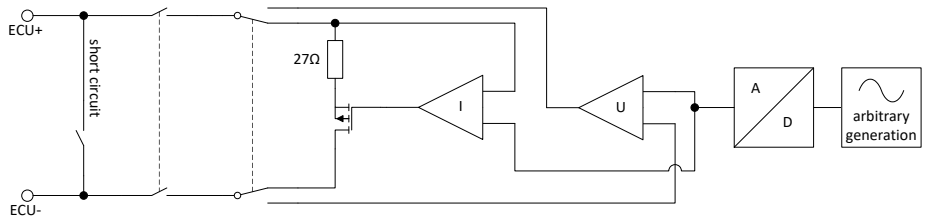

Figure **151:** Signal paths and switching options

The VT7820 has circuits to simulate either a voltage or a current based sensor. To vary between these two possibilities the signal path will be set by switching the relevant relays.

21.5.2.3 Automatic Creation of an Output Signal

An output signal (e.g. cogwheel) can be automatically created by the FPGA using the variable **NumberOfTeeth**. With **NumberOfTeeth** it is specified how many teeth should be created for the signal. The creation is automatically activated when a new value for **NumberOfTeeth** is send to the FPGA. Up to 3600 teeth can be created this way. The teeth are distributed as evenly as possible. The creation takes up to 1 second to complete.

To remove a specific tooth the variable **RemoveToothAtIndex** is used. **RemoveToothAtIndex** specifies which tooth should be removed. Valid index values range between 0 and (NumberOfTeeth – 1). This process uses the original signal, even considering already removed teeth. The removal is

automatically activated when a new value for **RemoveToothAtIndex** is sent to the FPGA. Only one tooth can be removed at a time. The removal takes up to 1 ms.

21.5.2.4 Manual Creation of a Signal

An output signal can be created manually be telling the FPGA if you want a rising or falling edge at a specific angle. This option uses the variables **DownloadAngle**, **DownloadEdge**, **DownloadTrigger**, **DownloadUpdate** and **DownloadUpdateAck**. To manually download an output signal the following steps have to be executed:

1. **DownloadAngle** has to be set to the angle (in degree) for the edge.
2. **DownloadEdge** specifies if it is a rising or falling edge. 0 for a falling edge and 1 for a rising edge.
3. **DownloadUpdate** is used for a handshake. As soon as the FPGA wrote the edge into its RAM, the value will be returned to CANoe via the variable **DownloadUpdateAck**. It is recommended that two consecutive dates use separate **DownloadUpdate** cycles.
4. **DownloadTrigger** activates the creation of the edge using **DownloadAngle**, **DownloadEdge** and **DowndloadUpdate**.
5. **DownloadUpdateAck** is returned from the FPGA to CANoe to signalize that a downloaded value was written into the RAM. This variable returns the value of **DownloadUpdate**.

21.5.3 Error Simulation

The module features basic error simulation and parameter variation possibilities:

- Simulation of broken wire
- Simulation of short circuit between ECU+ and ECU-
- Variation of signal high and low levels
- Variation of rise and fall times

The variation range of the parameters and values can be found under Technical Data.

The simulation of short and broken wires will be done by relays. The necessary relay settings can be found in the figure under Signal Path Switching.

21.5.4 Constant Output

A constant output value can be generated using the following steps:



Step by Step Procedure

1. Set **OutputType** and **RelaySwitch** to 0 for constant current output or to 1 for constant voltage output.
2. Create an output signal with 0 teeth by setting **NumberOfTeeth** to 0.
3. Set **SensorType** to 1 (S-Sensor).
4. Set **ActivateOutput** to 1.
5. Use **LowVoltage** or **LowCurrent** to control the constant output signal value. The middle and high values are ignored if the sensor has 0 teeth.
   Set the **RelayBreak** relay to 1.

21.5.5 Connectors

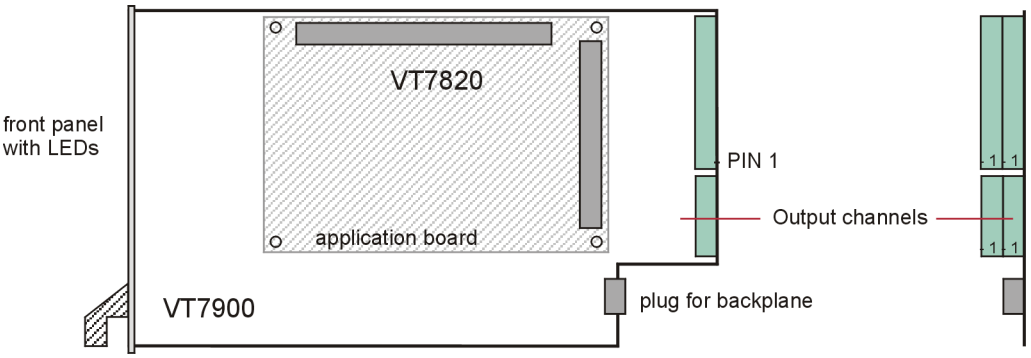

Figure **152:** Connectors

21.5.5.1 Output Connector

Plug type: Phoenix Contact MC 1,5/10-ST-3,81

Plug allocation (from top to bottom, viewed from the rear after installation):

Pin	Description
10	N.C.
9	N.C.
8	ECU-4
7	EC+4
6	ECU-3
5	ECU+3
4	ECU-2
3	ECU+2
2	ECU-1
1	ECU+1

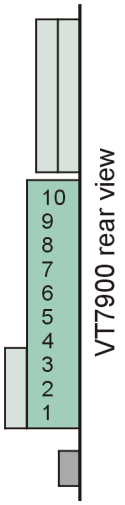

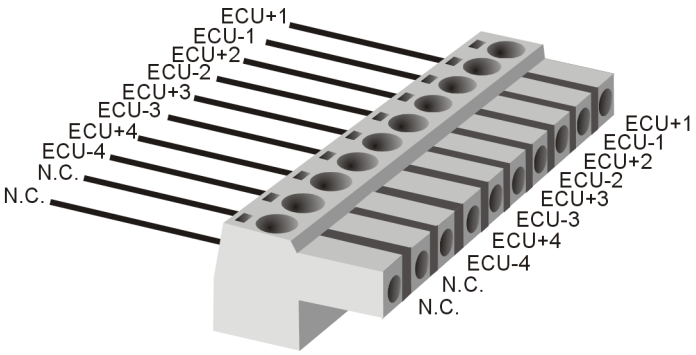

Figure **153:** Output connector

21.5.6 Technical Data VT7820

21.5.6.1 General

Parameter	Min.	Typ.	Max.	Unit
Supply voltage (via the backplane)	10.8	12	13.2	V
Power consumption at 12.0 V > all relays off > all relays on		 6.1 8.6		 W W
Temperature range	0		+55	°C
Dimensions (length × width × depth) incl. VT7900A	160 x 100 x 20 300 x 173 x 36			mm mm
Total weight incl. VT7900A	approx. 100 approx. 450			g g

21.5.6.2 Current Stimulation

Parameter	Min.	Typ.	Max.	Unit
Input voltage range > allowed > range ≤ 20mA > range > 20mA	 0 2 5		 24	 V V V

Parameter	Min.	Typ.	Max.	Unit
Output current range > at voltage ≤ 12V > at voltage > 12V, load < 100Ω > at voltage > 12V, load ≥ 100Ω	 0 0 0		 100 50 100	 mA mA mA
Accuracy at 23±3°C, ±(% of value + offset) > full range	 -(2.0+1 mA)		 +(2.0+1 mA)	
D/A converter > Resolution > Sample rate		 14 6		 Bits MSamples/s
Bandwidth			300	kHz
Slew Rate (resistive load)		250		mA/µs

21.5.6.3 Voltage Stimulation

Parameter	Min.	Typ.	Max.	Unit
Output voltage range	-12		12	V
Output current			50	A
Accuracy at 23±3°C, ±(% of value + offset) > full range	 -(2.0+0.5 V)		 +(2.0+0.5 V)	
D/A converter > Resolution > Sample rate		 14 6	 0.5 2.0	 Bits MSamples/s
Bandwidth			1	MHz
Slew Rate (resistive load)		190		V/µs

21.6 VT7852

21.6.1 Purpose

The VT7852 is an application board for the VT7900A. It can be used as fault injection unit for multi gigabit differential signals.

21.6.2 Usage

21.6.2.1 Schematics

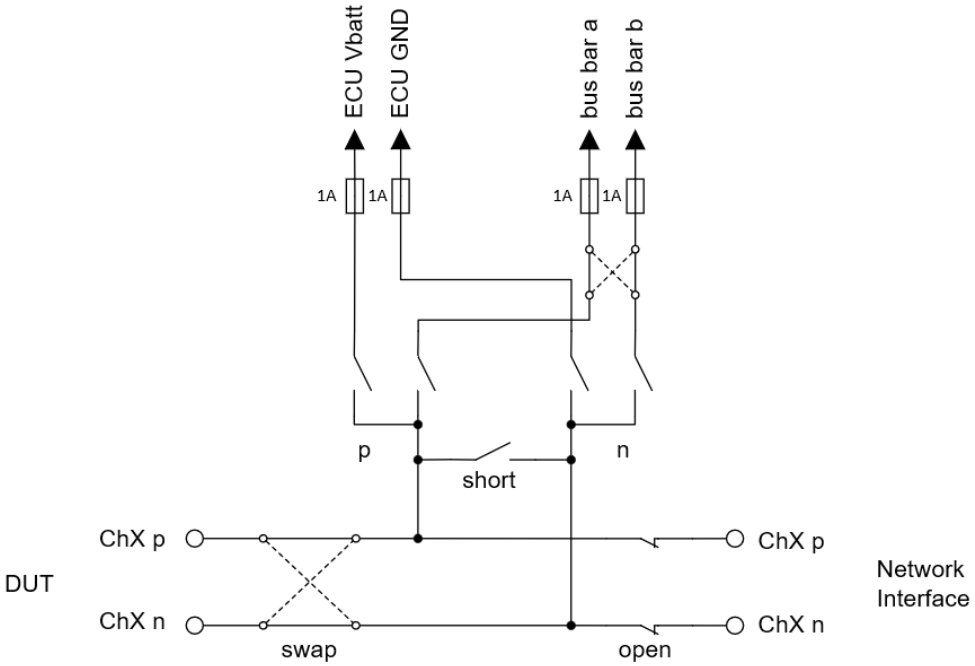

Figure **154:** VT7852 schematics

21.6.3 Connectors

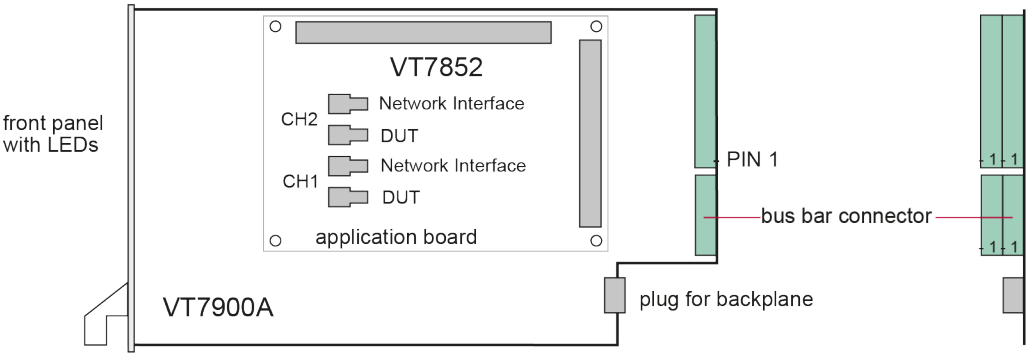

Figure **155:** Connectors

21.6.3.1 Signal Connector

Plug type: YCP-BWI09ACX

Plug allocation (viewed from the front):

Pin	Description
2	CHx MDI
1	CHx MDI+



21.6.3.2 Bus Bar Connector

Plug type: Phoenix Contact MC 1,5/10-ST-3,81

Plug allocation (from top to bottom, viewed from the rear after installation):

Pin	Description
10	N.C.
9	N.C.
8	N.C.
7	N.C.
6	N.C.
5	N.C.
4	ECU Vbatt
3	ECU GND
2	Bus bar a
1	Bus bar b

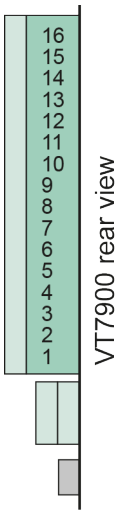

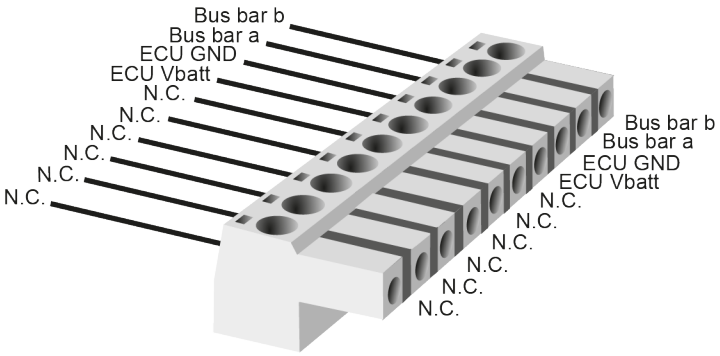

Figure **156:** Bus bar connector

21.6.4 Technical Data VT7852

21.6.4.1 General

Parameter	Min.	Typ.	Max.	Unit
Supply voltage (via the backplane)	10.8	12	13.2	V
Power consumption at 12.0 V > all relays off > all replays on		 2.1 4.3		 W W
Temperature range	0		+55	°C
Dimensions (length × width × depth) incl. VT7900A	160 x 100 x 20 300 x 173 x 36			mm mm
Total weight incl. VT7900A	approx. 138 approx. 478			g g

21.6.4.2 Input Signals

Parameter	Min.	Typ.	Max.	Unit
Input voltage (pin to pin)	-30		30	V
Carrying current (continuous current per channel, relay closed)			50	mA
Resistance (pin to pin, at initial condition)		350		mΩ
Signal transmission capability (square wave)		4		GHz
Differential impedance (P, N to shield)		100		Ω

21.6.4.3 Relays

Parameter	Min.	Typ.	Max.	Unit
Switching current (current per channel)			1	A
Operate time (without bounce)		1.4	5	ms
Release time (without bounce)		1.3	5	ms
Bounce time		1	5	ms

Parameter	Min.	Typ.	Max.	Unit
Mechanical endurance	$50x10^6$			Cycles
Electrical endurance (resistive load, 1A / 30VDC)	$100x10^3$			Cycles

21.7 VT7880 - GB/T CHAdeMO

21.7.1 Purpose

The VT7880 is a module for simulating DC charging interfaces between electric vehicles (EV) and charging stations (EVSE). It is an application board designed for integration into automated test systems and Hardware-in-the-Loop (HiL) environments. The module enables the simulation of both a charging station and an electric vehicle according to relevant international DC charging standards.

It is an application board which is mounted on the VT7900A extension module. The module can simulate voltage and resistor values based on the different charging standards and has the following features:

- Internal power supply is electrically isolated from the remaining VT System
- Output Currents from 0 A to 300 mA
- Internal power supply from 1.5 V to +13 V

Charging Standards

Several charging standards are directly supported by this module.

The following standards are supported:

- **GB/T 2015**: The communication is based on a simple analog signaling concept. The control pilot (CC) signal is represented by defined voltage or current levels, which directly correspond to the charging state. No additional encoded information is transmitted.
- **GB/T 2024**: This standard extends the signaling by introducing more advanced electrical characteristics and additional state definitions. The signal levels provide more detailed information about the charging process and system status, enabling improved communication between EV and EVSE.
- **CHAdeMO 2.0**: The communication is based on discrete voltage levels and switching signals on multiple control lines (e.g., CP1, CP2, CP3, CS). These signals represent different charging states and control sequences. The interaction between EV and EVSE is defined by specific voltage levels and transitions, including support for auxiliary power control.
- **CHAdeMO 3.0 (ChaoJi type 2)**: This standard introduces enhanced signaling and higher flexibility for next-generation high-power charging systems. The communication behavior is extended while maintaining compatibility with existing concepts. It allows synchronized and more complex control of charging processes, supporting advanced system configurations and higher performance requirements.

This wide range of supported standards allows the module to be used in diverse validation and development scenarios across different charging technologies.

21.7.2 Usage

21.7.2.1 Schematics

For simulating different charging standards the following parts can be simulated:

- **Signal Interfacing**

  The VT7880 can be used flexibly to simulate both sides of a GB/T 2015 & 2024 charging interface. It is capable of emulating either the charger (EVSE) or the electric vehicle (EV), allowing it to be deployed at both connection points within a test setup.

For signal interfacing, the VT7880 provides dedicated outputs for CC1 and CC2, which can be connected directly to the corresponding pins of the system under test. Depending on the selected simulation mode (charger or EV), the device reproduces the appropriate electrical characteristics defined by the GB/T 2015 & 2024 standard. In addition, the CC1 and CC2 signals are available as system variables (SysVars) in CANoe, enabling direct access for measurement, control, and automation within the simulation environment.

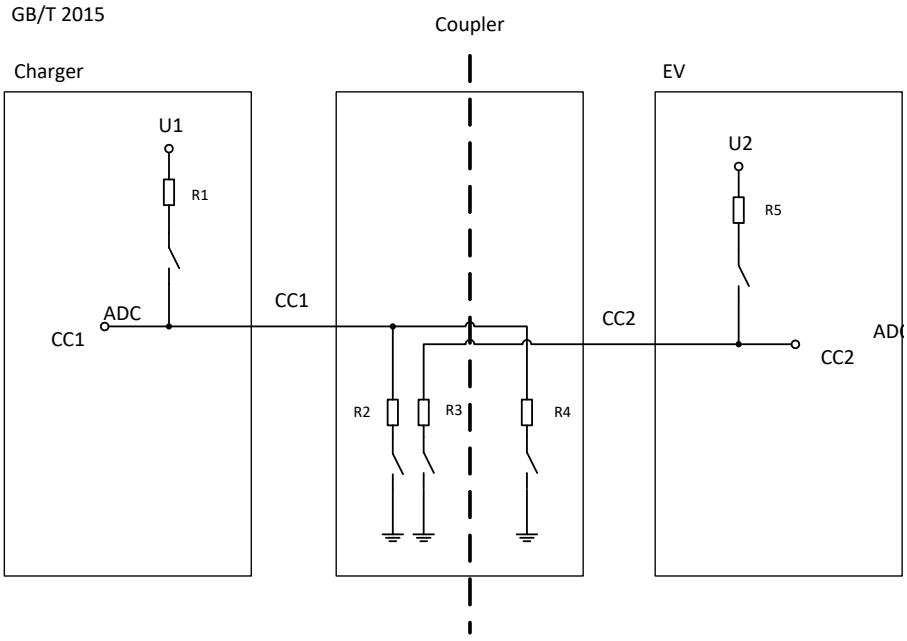

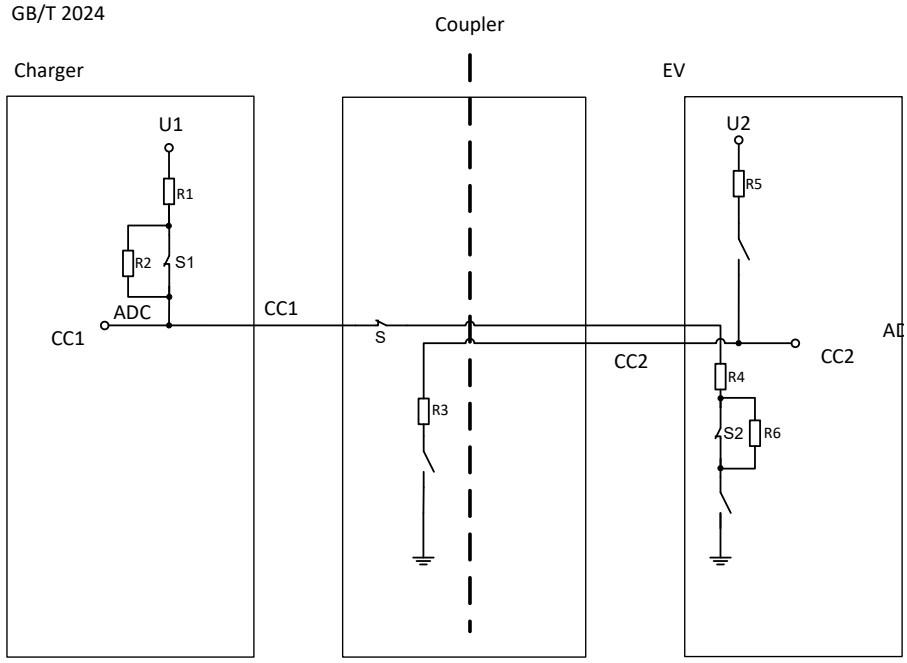

> Signal Interfacing

The VT7880 can be used flexibly to simulate both sides of a CHAdeMO 2.0 charging interface. It is capable of emulating either the charger (EVSE) or the electric vehicle (EV), allowing it to be deployed at both connection points within a test setup.

For signal interfacing, the VT7880 provides dedicated connections for CP1, CP2, CP3, and CS, which can be directly linked to the corresponding pins of the system under test. These signals represent the control pilot communication and status signaling defined within the CHAdeMO 2.0 specification. Depending on the selected simulation mode (charger or EV), the device reproduces the required electrical behavior, including voltage levels, switching states, and signal responses.

In addition, relevant signals such as CP1, CP2, CP3, and CS are available as system variables (SysVars) in CANoe, enabling direct access for measurement, control, and automation within the simulation environment. This allows comprehensive testing of communication sequences, interlock conditions, and charging state transitions according to the CHAdeMO 2.0 standard.

CHAdeMO 2.0

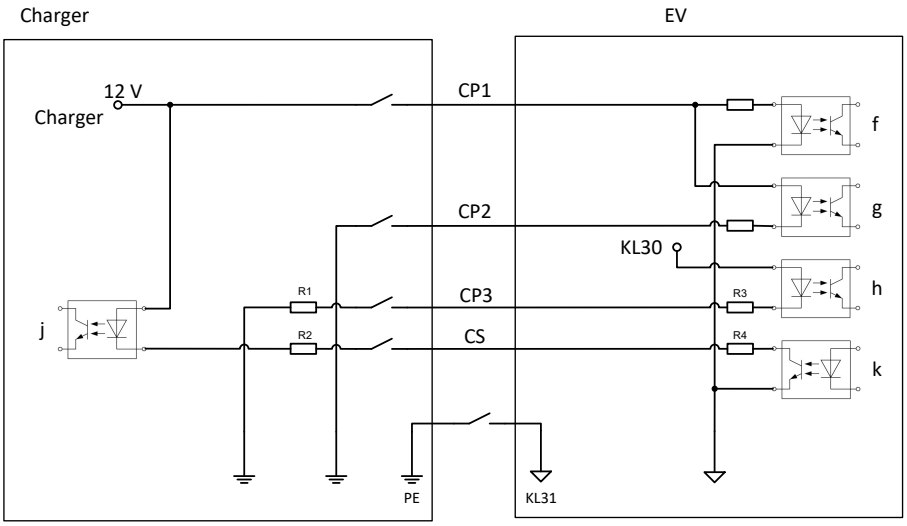

> **Connecting of voltage signal**

The VT7880 can be used flexibly to simulate both sides of a CHAdeMO 3.0 (ChaoJi Type 2) charging interface. It is capable of emulating either the charger (EVSE) or the electric vehicle (EV), allowing it to be deployed at both connection points within a test setup.

For signal interfacing, the VT7880 provides access to the CC1 and CC2 signal lines, which are used for control pilot communication and state detection in the ChaoJi system. These signals can be connected directly to the corresponding pins of the system under test. The interface includes appropriate circuitry to replicate the defined electrical behavior, such as voltage levels, resistor networks, and switching states between EV and EVSE.

Depending on the selected simulation mode (charger or EV), the VT7880 reproduces the required signal characteristics in accordance with the CHAdeMO 3.0 specification. This includes support for state transitions, connection detection, and safety-related signaling defined by the ChaoJi standard.

In addition, the CC1 and CC2 signals are available as system variables (SysVars) in CANoe, enabling direct access for measurement, control, and automation within the simulation environment. This allows detailed analysis and validation of signaling behavior, including dynamic state changes and interaction between EV and EVSE under various test conditions.

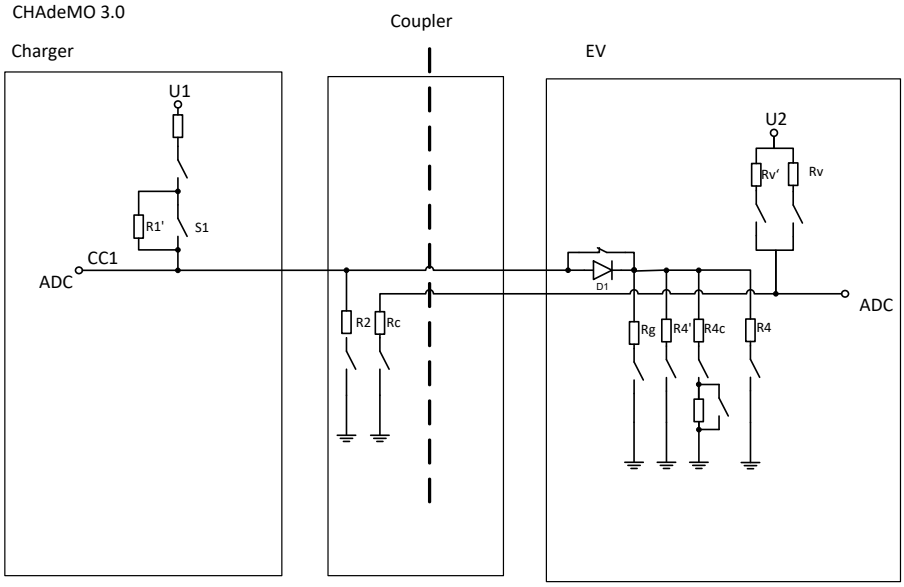

CAUTION!

This application board (signals, supply voltages and ground) is electrically isolated from the remaining VT System.

When connecting external measurement equipment (e.g., an oscilloscope), ensure that no ground connection to the VT System is established via the power network. It is recommended to use an isolation transformer.

21.7.2.2 Signal Path Switching

Signal paths and switching options GB/T 2015

The figure below shows the signal paths and switching options.

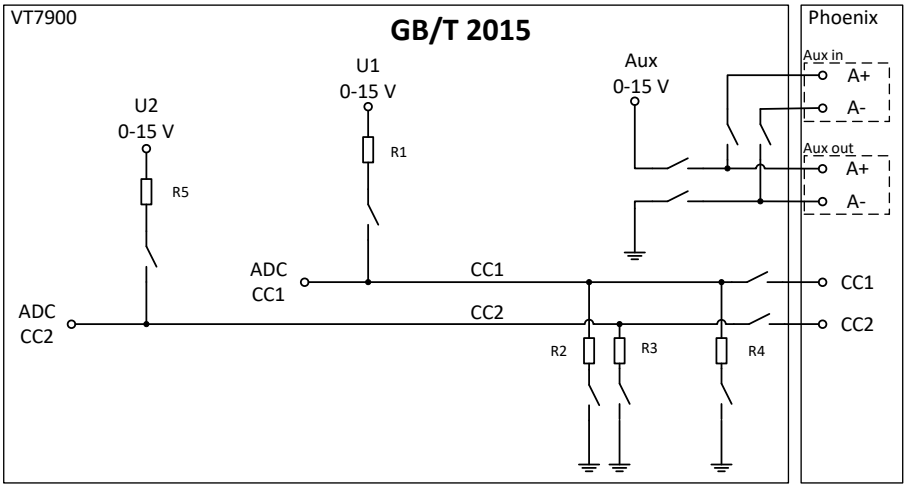

Figure **157:** Signal paths and switching options (GB/T 2015)

The VT7880 provides flexible configuration options for simulating GB/T 2015 control signals. The voltages U1, U2, and Aux can either be supplied by the internal voltage source or defined externally via

an independent voltage source. This allows precise adjustment of signal levels depending on the specific test scenario.

The resistors R1 to R5 (nominally 1 kΩ, ±3%) can be switched individually, enabling application-specific adaptation of the signal paths. This makes it possible to emulate different load conditions and circuit configurations as required by the standard or the device under test.

Additionally, the CC1 and CC2 lines are routed to ADC inputs, allowing direct voltage measurement and monitoring within the system.

The Aux interface is intended for the low-voltage auxiliary power supply of the DC power circuit, e.g., for controlling contactors of the high voltages relays. When using the internal voltage source, the Aux output can supply up to 300 mA. When an external voltage source is applied, currents of up to 2.00 A can be delivered via the Aux path, enabling more realistic operation of higher-power auxiliary components.

Signal paths and switching options GB/T 2024

The figure below shows the signal paths and switching options.

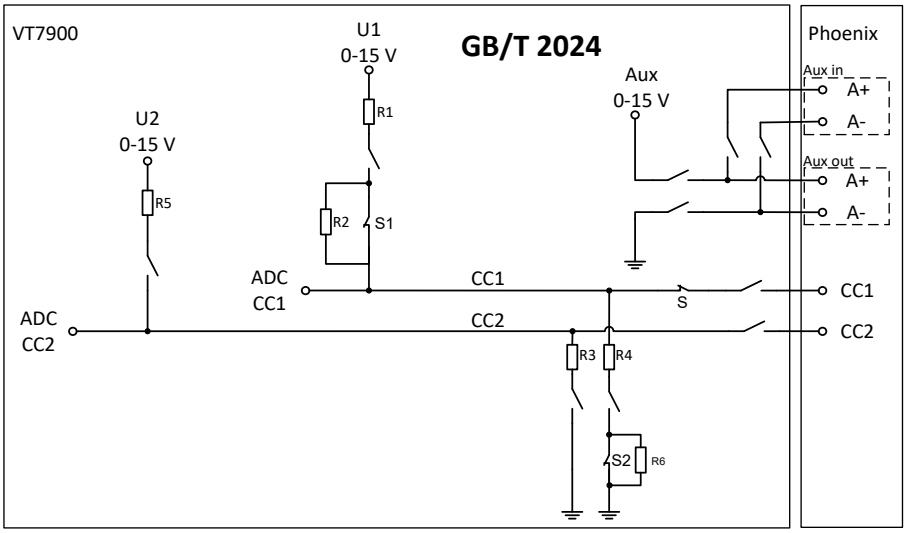

Figure **158:** Signal paths and switching options (GB/T 2024)

The VT7880 provides flexible configuration options for simulating GB/T 2024 control signals. The voltages U1, U2, and Aux can either be supplied by the internal voltage source or defined externally via an independent voltage source. This allows precise adjustment of signal levels depending on the specific test scenario.

The resistors R1 to R6 (tolerance ±1%) can be switched individually, enabling application-specific adaptation of the signal paths. This makes it possible to emulate different load conditions and circuit configurations as required by the standard or the device under test.

Additionally, the CC1 and CC2 lines are routed to ADC inputs, allowing direct voltage measurement and monitoring within the system.

The Aux interface is intended for the low-voltage auxiliary power supply of the DC power circuit, e.g., for controlling contactors of the high voltages relays. It provides or interfaces with a 12 V supply (±5%). When using the internal voltage source, the Aux output can supply up to 280 mA. When an external voltage source is applied, currents of up to 1.92 A can be delivered via the Aux path, enabling more realistic operation of higher-power auxiliary components.

Signal paths and switching options CHAdeMO 2.0

The figure below shows the signal paths and switching options.

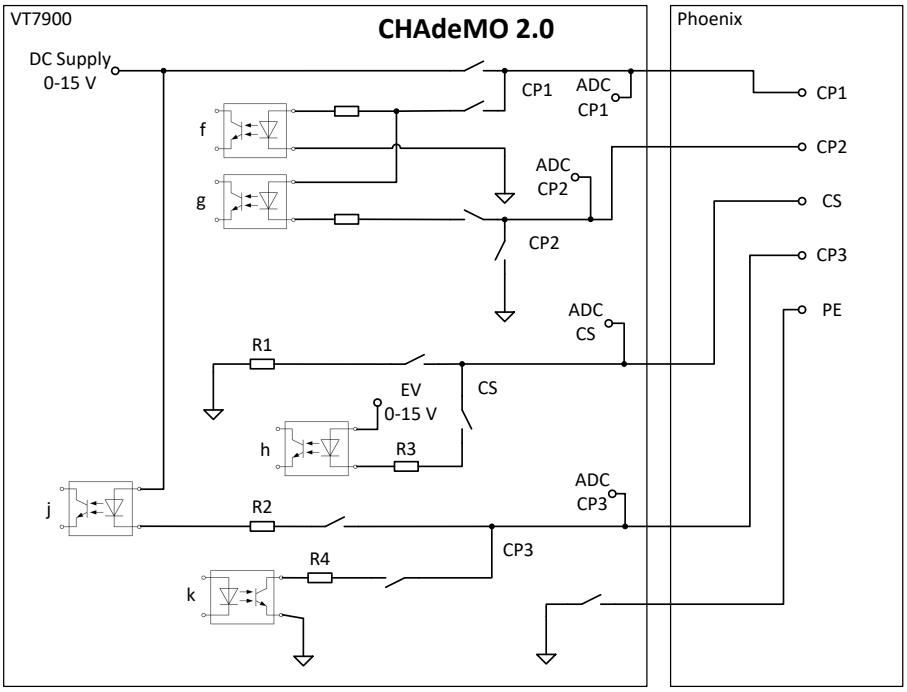

Figure **159:** Signal paths and switching options (CHAdeMO 2.0)

The VT7900 provides flexible configuration options for simulating CHAdeMO 2.0 control signals. The voltages U1 (EVSE) and U2 (EV) can either be supplied by the internal voltage source or defined externally via an independent voltage source. This allows precise adjustment of signal levels depending on the specific test scenario.

The resistors R1 to R4 (tolerance ±1%) can be switched individually, enabling application-specific adaptation of the signal paths. This makes it possible to emulate different load conditions and circuit configurations as required by the standard or the device under test.

Additionally, the CC1 and CC2 lines are routed to ADC inputs, allowing direct voltage measurement and monitoring within the system.

Signal paths and switching options CHAdeMO 3.0 (ChaoJi type 2)

The figure below shows the signal paths and switching options.

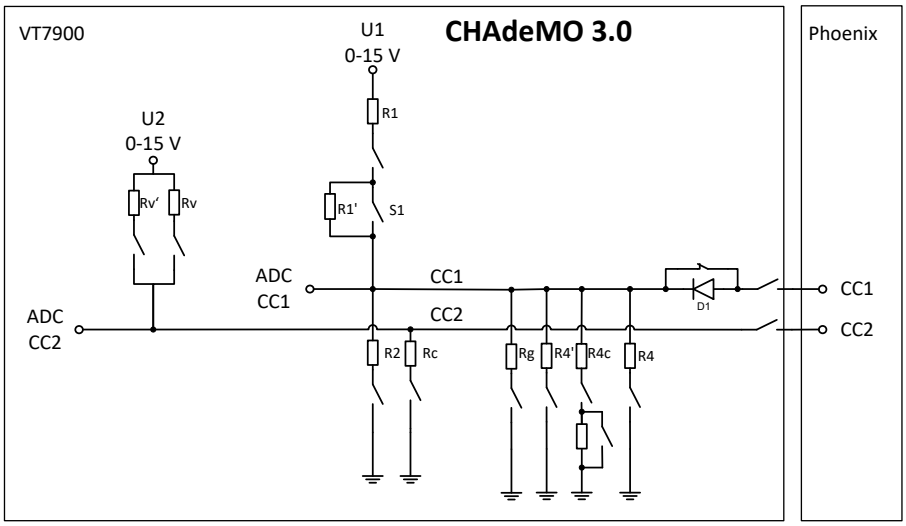

Figure **160:** Signal paths and switching options (CHAdeMO 3.0)

The VT7880 enables simulation of both EVSE and EV according to the CHAdeMO 3.0 (ChaoJi Type 2) standard. The voltages U1(EVSE) and U2 (EV) can be adjusted variably, allowing precise control of the signal levels in accordance with the required test conditions.

The resistors R1 to R4, Rv, Rg (tolerance ±1%) can be switched individually, enabling application-specific adaptation of the signal paths. This allows emulation of different load conditions and circuit configurations as defined by the standard or required by the device under test.

The resistance value of R4c is automatically adjusted depending on the state of diode D1. In accordance with the specification, the value changes from 200 Ω to 130 Ω when the diode is activated or deactivated, ensuring compliant behavior without additional configuration effort.

Additionally, the CC1 and CC2 lines are routed to ADC inputs, allowing direct voltage measurement and monitoring within the system.

This setup provides a high degree of flexibility and accuracy for validation and testing of CHAdeMO 3.0 charging communication.

21.7.3 Connectors

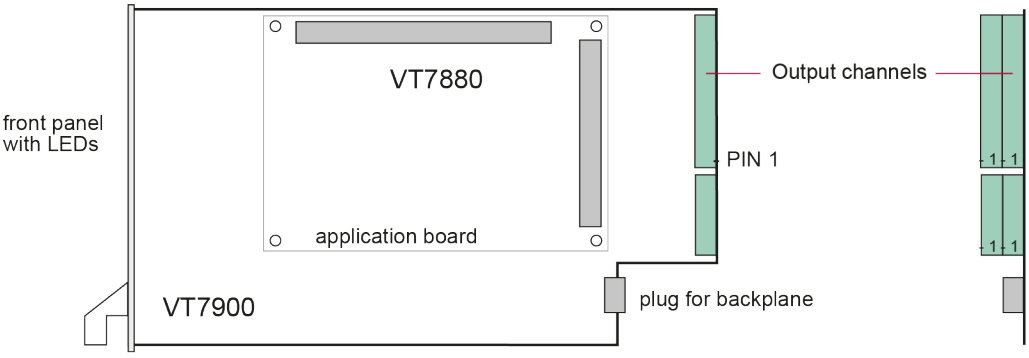

Figure **161:** Connectors

21.7.3.1 Output Connector

Plug type: Phoenix Contact MC 1,5/16-ST-3,81

Plug allocation (from top to bottom, viewed from the rear after installation):

Pin	Description
16	CHAdeMO 3.0 PE / GB/T PE
15	GB/T A-
14	GB/T A+
13	CHAdeMO 3.0 / GB/T CC2
12	CHAdeMO 3.0 / GB/T CC1
11	N.C.
10	N.C.
9	N.C.
8	N.C.
7	N.C.
6	N.C.
5	N.C.
4	N.C.
3	N.C.
2	Ext. Supply
1	Ext. Supply GND

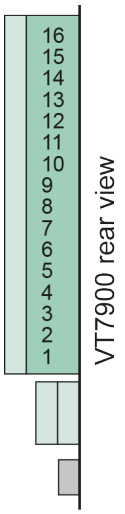

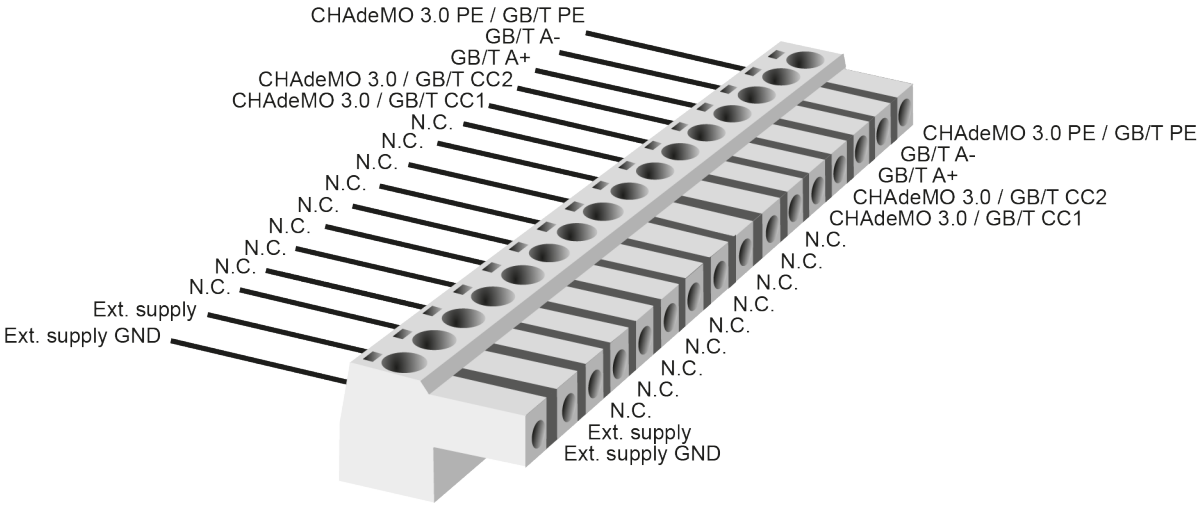

Figure **162:** Output connector

NOTICE!

The ext. Supply inputs are designed exclusively for low-voltage signals in the range of 0 to 15 V.

Do not apply any DC high voltage above this range to the inputs, as this will permanently damage the module. The grounds of the control voltage and the high-voltage system may be connected if required.

For this purpose, the PE connection of the connector is provided. This connection can also be switched or disconnected via a relay within the simulation setup.

Plug type: Phoenix Contact MC 1,5/16-ST-3,81

Plug allocation (from top to bottom, viewed from the rear after installation):

Pin	Description
16	CHAdeMO PE
15	CHAdeMO CP3
14	CHAdeMO CP2
13	CHAdeMO CP
12	CHAdeMO CS
11	N.C.
10	N.C.
9	N.C.

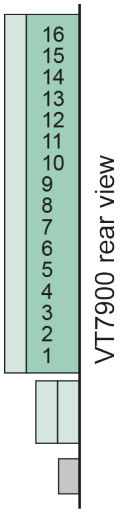

Pin	Description
8	N.C.
7	N.C.
6	N.C.
5	N.C.
4	N.C.
3	N.C.
2	Ext. Supply
1	Ext. Supply GND

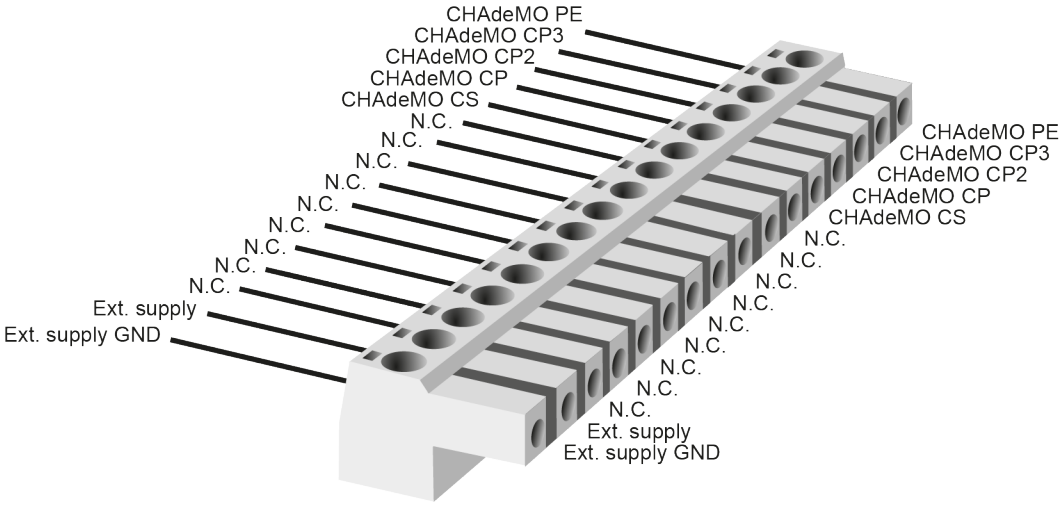

Figure **163:** Output connector

NOTICE!

The ext. Supply inputs are designed exclusively for low-voltage signals in the range of 0 to 15 V.

Do not apply any DC high voltage above this range to the inputs, as this will permanently damage the module. The grounds of the control voltage and the high-voltage system may be connected if required.

For this purpose, the PE connection of the connector is provided. This connection can also be switched or disconnected via a relay within the simulation setup.

21.7.4 Technical Data VT7880

21.7.4.1 General

Parameter	Min.	Typ.	Max.	Unit
Supply voltage (via the backplane)	10.8	12	13.2	V
Power consumption at 12.0 V > all relays off > all replays on		 3.1 9.2		 W W
Temperature range	0		+55	°C
Dimensions (length × width × depth) incl. VT7900A	160 x 100 x 20 300 x 173 x 36			mm mm
Total weight incl. VT7900A	approx. 152 approx. 493			g g
External supply voltage	0		15	V

21.7.4.2 Resistor Values GB/T 2015

Parameter	Min.	Typ.	Max.	Unit
R1 - R5	970	1000	1030	Ω

21.7.4.3 Resistor Values GB/T 2024

Parameter	Min.	Typ.	Max.	Unit
R1	1980	2000	2020	Ω
R2	2970	3000	3030	Ω
R3 - R5	990	1000	1010	Ω
R6	8910	9000	9090	Ω

21.7.4.4 Resistor Values CHAdeMO 2.0

Parameter	Min.	Typ.	Max.	Unit
R1, R4	190	200	210	Ω
R2, R3	950	1000	1050	Ω

21.7.4.5 Resistor Values CHAdeMO 3.0

Parameter	Min.	Typ.	Max.	Unit
R1, Rv	990	1000	1010	Ω
R1'	9.9	10	10.1	kΩ
R2, Rg	99	100	101	kΩ
R4	1287	1300	1313	Ω
R4'	2713	2740	2767	Ω
R4c (D1 active) R4c (D1 inactive)	129 198	130 200	131 202	Ω Ω
Rv'	1575	1590	1605	Ω

21.7.4.6 Voltage Generation

Parameter	Min.	Typ.	Max.	Unit
Internal voltage generation	1.5		13.0	V
Accuracy at 23±5°C, ±(% of value + offset) > at output current ≤ 0.1 A	 -150		 +150	 mV
External supply voltage	0		15	V
Output current range > internal voltage generation > external supply voltage	 0 0		 0.3 2.0	 A A

21.7.4.7 Voltage Measurement

Parameter	Min.	Typ.	Max.	Unit
Internal voltage range > allowed	 0		 15	 V
Accuracy at 23±3°C > full range	 -150		 +150	 mV

Parameter	Min.	Typ.	Max.	Unit
D/A converter > Resolution > Sample rate		 16 500		 Bits kSamples/s
Bandwidth			1.06	kHz
Crosstalk	-10		+10	mV

22 VT7900A – Extension Module

In this chapter you find the following information:

22.1 Purpose **338**
22.2 Installation **338**
22.3 Usage **338**
22.3.1 General 338
22.3.2 Controlling the Application Board 338
22.3.3 Front LEDs 339
22.4 Application Board **339**
22.4.1 Dimensions 339
22.4.2 Supply Power for the Application Board 340
22.4.3 Configuration EEPROM on the Application Board 340
22.4.4 Electrical Interface Characteristics 340
22.4.5 Using the I/O Lines of the VT7900A on the Application Board 340
22.4.6 Adding I/O Interfaces to the Application Board 340
22.5 Connectors **341**
22.5.1 Connectors for Signals from Application Board 341
22.5.2 Application Board Connectors 342
22.6 Technical Data VT7900A **348**
22.6.1 General 348
22.6.2 Application Board 348
22.6.3 Connectors for Application-specific Signals 348
22.6.4 Analog Inputs AIN0 ... AIN3 349
22.6.5 Analog Output AOUT0 ... AOUT3 349

22.1 Purpose

The Extension Module VT7900A is used to extend the VT System by adding modules with task-specific circuits. The VT7900A serves as the main board, on which an application board is inserted. The application board can be developed by the user or by Vector.

22.2 Installation

To use the extension module VT7900A an appropriate application board is required.

First, plug-in the application board on the VT7900A and screw both boards together using distance bolts. The combined VT7900A and application board can now be handled like every other VT System module.

Please follow the general installation instructions in chapter 2.1.2 Modules.

22.3 Usage

22.3.1 General

The application-specific electronics is provided by the application board. The VT7900A provides the supply power for the application board, some digital and analog I/O lines to control the application-specific electronics, and interfaces to add additional digital/analog I/O interfaces on the application board. The signal lines from the application boards are routed over the VT7900A to its connectors at the rear.

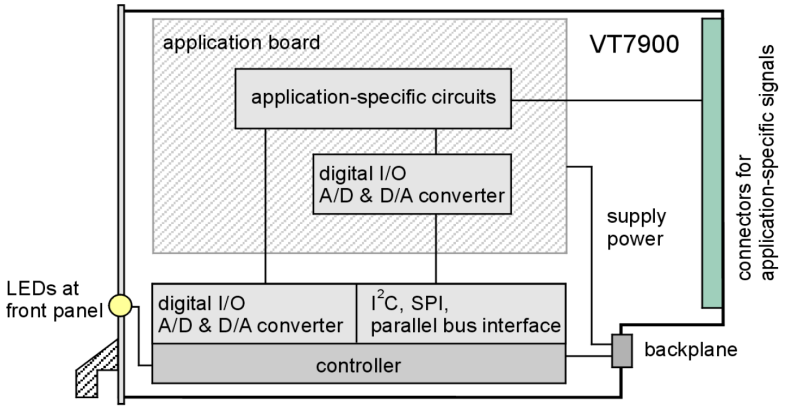

Figure **164:** VT7900A architecture

22.3.2 Controlling the Application Board

Electronics on the application board are controlled via digital and analog inputs and outputs. The corresponding interface components are located on the application board or directly on the VT7900A. All I/Os are accessed in CANoe via system variables that are automatically generated.

In a configuration you can specify which I/Os are to be used for control of the application board and with which system variables these controls are accessed in CANoe. This configuration is specific to a given application board and is saved on the board. CANoe can access this configuration so that it is possible to recognize a VT7900A with application board automatically and the corresponding system variables can be generated automatically by CANoe.

First the application board has to be created. Then the configuration has to be generated and loaded onto the application board. The necessary tool, the Application Board Configurator, is included in CANoe.

Cross Reference

The latest version of the Application Board Configurator which includes the related user manual can be found in the CANoe installation (start menu | CANoe | Tools).

22.3.3 Front LEDs

There are 16 LEDs for status display located on the front panel of the VT7900A. They are arranged in 8 blocks, each with one red and one green LED. They can be controlled from within CANoe. The LEDs have no effect on the application board.

22.4 Application Board

22.4.1 Dimensions

The following image shows the dimensions as well as the location of the drill holes and the plugs.

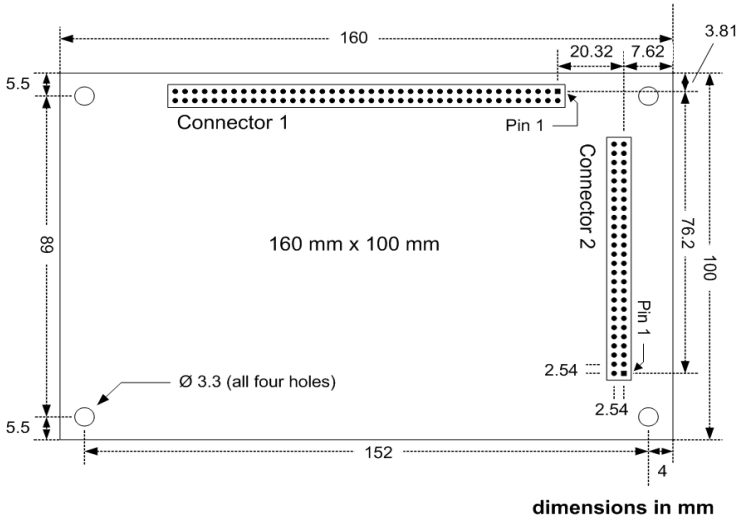

Figure **165:** Application board

Note

To make the design of an application board easier, there are special templates for the PCB design tool EAGLE available. They provide a pre-designed layout of the application board with the mechanical dimensions and connectors. Please refer to the user manual of the Application Board Configurator for more information.

22.4.2 Supply Power for the Application Board

The application board provides two different supply voltages:

- 12 V directly from the backplane; from this voltage, further voltage supplies can be created on the application board as required.
- 3.3 V provided by the VT7900A for the supply of digital logic components.

22.4.3 Configuration EEPROM on the Application Board

The application board configuration is saved directly on the board. For this purpose, an I²C EEPROM has to be provided on every application board. The following image shows one possible wiring. A 64 Kbit EEPROM of type 24LC64 or a compatible EEPROM has to be used.

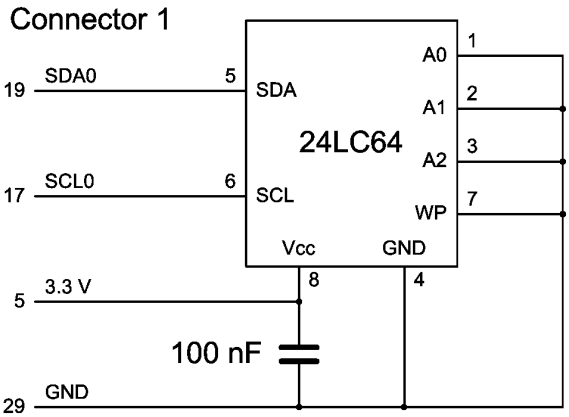

Figure **166:** Wiring

22.4.4 Electrical Interface Characteristics

For the interface between the VT7900A and the application board (SPI, parallel bus, digital input/output ...) 3.3 V TTL levels are used. All input lines are 5 V tolerant. The I²C lines are switched between 3.3 V levels and 5 V levels explicitly by the VT7900A. Thus, it is possible to use 5 V logic circuits on the application board.

The interface voltage input of the VT7900A (pin 7 on connector 1 of the application board) has to be set to 3.3 V or to 5 V according to the used logic voltage on the application board. Please note that a supply power of 5 V has to be generated on the application if required. The VT7900A only provides a supply power of 3.3 V.

22.4.5 Using the I/O Lines of the VT7900A on the Application Board

The VT7900A provides several I/O lines for direct control of the application electronics on the application board. The analog input and output signals relate to reference ground AGND. All other signals, including the digital input and output signals and the power supply, relate to VT System power supply ground DGND.

22.4.6 Adding I/O Interfaces to the Application Board

The VT7900A can access additional I/O interface chips on the application board, e.g. A/D converter. The interface chips are connected over SPI, I²C, or a 16 bit parallel bus. Because the firmware of the VT7900A has to support the chips, only some defined interface chips may be used.

Please refer to the user manual of the Application Board Configurator to determine which interface chips are supported by the VT7900A firmware.

22.5 Connectors

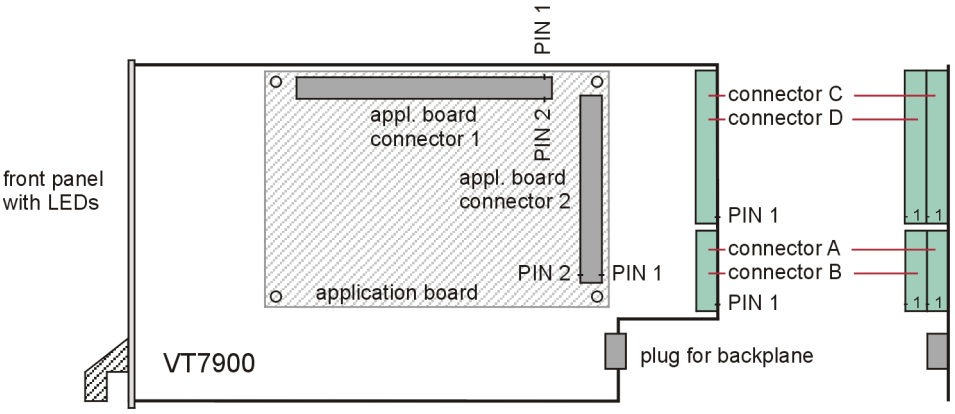

Figure **167:** Connectors

22.5.1 Connectors for Signals from Application Board

Plug type: Phoenix Contact MC 1,5/16-ST-3,81 respective MC 1,5/10-ST-3,81

Plug allocation of connector **A** (from top to bottom, viewed from the rear after installation):

- Connector **A**, **B**, **C** and **D** are allocated in the same way.
- Connectors **A** and **B** provide 10 signals (A1...A10 and B1...B10) from the application board.
- Connectors **C** and **D** provide 16 signals (C1...C16 and D1...D16).

Pin	Description
10	Signal A10 from application board
9	Signal A9 from application board
8	Signal A8 from application board
7	Signal A7 from application board
6	Signal A6 from application board
5	Signal A5 from application board
4	Signal A4 from application board
3	Signal A3 from application board
2	Signal A2 from application board
1	Signal A1 from application board

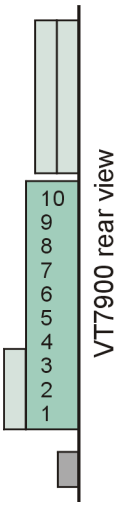

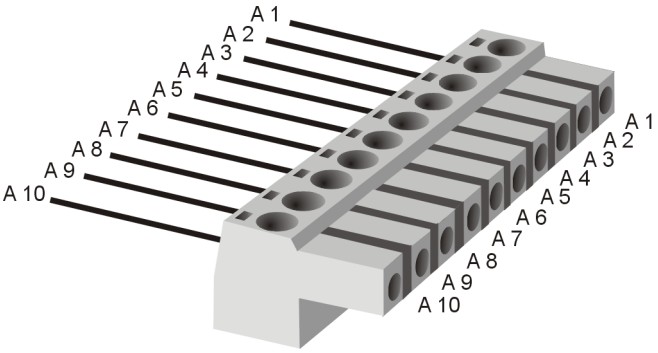

Figure **168:** Connector A for signals

22.5.2 Application Board Connectors

Plug type: Pin header, pitch 2.54 mm (0.100”), 2x40 (connector 1) and 2x26 (connector 2).

Plug allocation of connector **1**:

Pin	Description
1	12 V supply power
2	12 V supply power
3	3.3 V supply power
4	DPDATA – display port data – reserved, not used
5	3.3 V supply power
6	DPCLK – display port clock – reserved, not used
7	Interface voltage (3.3 V or 5.0 V)
8	DPSTRB – display port strobe – reserved, not used
9	DIN0 – digital input
10	DOUT0 – digital output
11	DIN1 – digital input
12	DOUT1 – digital output
13	DIN2 – digital input
14	DOUT2 – digital output
15	DIN3 – digital input

Pin	Description
16	DOUT3 – digital output
17	SCL0 – I²C for configuration EEPROM (clock)
18	SCL1 – I²C for extra peripherals (clock)
19	SDA0 – I²C data for configuration EEPROM (data)
20	SDA1 – I²C for extra peripherals (data)
21	MISO – SPI for extra peripherals (data input)
22	MOSI – SPI for extra peripherals (data output)
23	SPCK – SPI for extra peripherals (clock)
24	/MIRQ – SPI for extra peripherals (interrupt)
25	/MCS0 – SPI for extra peripherals (chip select 0)
26	/MCS1 – SPI for extra peripherals (chip select 1)
27	/MCS2 – SPI for extra peripherals (chip select 2)
28	/MCS3 – SPI for extra peripherals (chip select 3)
29	DGND – ground
30	DGND – ground
31	D0 – parallel bus for extra peripherals (data)
32	D1 – parallel bus for extra peripherals (data)
33	D2 – parallel bus for extra peripherals (data)
34	D3 – parallel bus for extra peripherals (data)
35	D4 – parallel bus for extra peripherals (data)
36	D5 – parallel bus for extra peripherals (data)
37	D6 – parallel bus for extra peripherals (data)
38	D7 – parallel bus for extra peripherals (data)
39	D8 – parallel bus for extra peripherals (data)
40	D9 – parallel bus for extra peripherals (data)

Pin	Description
41	D10 – parallel bus for extra peripherals (data)
42	D11 – parallel bus for extra peripherals (data)
43	D12 – parallel bus for extra peripherals (data)
44	D13 – parallel bus for extra peripherals (data)
45	D14 – parallel bus for extra peripherals (data)
46	D15 – parallel bus for extra peripherals (data)
47	A1 – parallel bus for extra peripherals (address)
48	A2 – parallel bus for extra peripherals (address)
49	A3 – parallel bus for extra peripherals (address)
50	A4 – parallel bus for extra peripherals (address)
51	A5 – parallel bus for extra peripherals (address)
52	/RESET – parallel bus for extra peripherals
53	/WR – parallel bus for extra peripherals (write enable)
54	/RD – parallel bus for extra peripherals (read enable)
55	/BHE – parallel bus for extra peripherals – reserved, not used
56	/PCLK – parallel bus for extra peripherals (clock)
57	/CONV – parallel bus for extra peripherals (start of conversation)
58	/IRQ0 – parallel bus for extra peripherals (interrupt)
59	/WAIT – parallel bus for extra peripherals (wait)
60	/IRQ1 – parallel bus for extra peripherals (interrupt)
61	/BUSY – parallel bus for extra peripherals (busy)
62	/SIRQ – additional interrupt input
63	DGND – ground
64	DGND – ground
65	AGND – analog ground (connected to backplane)

Pin	Description
66	AGND – analog ground (connected to backplane)
67	AOUT0 – analog output
68	AOUT1 – analog output
69	AOUT2 – analog output
70	AOUT3 – analog output
71	AIN0 – analog input
72	AIN1 – analog input
73	AIN2 – analog input
74	AIN3 – analog input
75	ASH0 – sample&hold signal for analog input
76	ASH1 – sample&hold signal for analog input
77	ASH2 – sample&hold signal for analog input
78	ASH3 – sample&hold signal for analog input
79	AGND – analog ground (connected to backplane)
80	AGND – analog ground (connected to backplane)



Note

/SIG means signal is active low.

Plug allocation of connector **2** (signals from application board to rear connectors):

Pin	Description
1	Signal A1
2	Signal B1
3	Signal A2
4	Signal B2
5	Signal A3

Pin	Description
6	Signal B3
7	Signal A4
8	Signal B4
9	Signal A5
10	Signal B5
11	Signal A6
12	Signal B6
13	Signal A7
14	Signal B7
15	Signal A8
16	Signal B8
17	Signal A9
18	Signal B9
19	Signal A10
20	Signal B10
21	Signal C1
22	Signal D1
23	Signal C2
24	Signal D2
25	Signal C3
26	Signal D3
27	Signal C4
28	Signal D4
29	Signal C5
30	Signal D5

Pin	Description
31	Signal C6
32	Signal D6
33	Signal C7
34	Signal D7
35	Signal C8
36	Signal D8
37	Signal C9
38	Signal D9
39	Signal C10
40	Signal D10
41	Signal C11
42	Signal D11
43	Signal C12
44	Signal D12
45	Signal C13
46	Signal D13
47	Signal C14
48	Signal D14
49	Signal C15
50	Signal D15
51	Signal C16
52	Signal D16

22.6 Technical Data VT7900A

22.6.1 General

Parameter	Min.	Typ.	Max.	Unit
Supply voltage (via the backplane)	10.8	12	13.2	V
Power consumption at 12.0 V without application board		1.5		W
Temperature range	0		+55	°C
Dimensions (length × width × depth)	300 x 173 x 36			mm
Total weight without application board	approx. 340			g

22.6.2 Application Board

Parameter	Min.	Typ.	Max.	Unit
Dimensions (length × width)	160 × 100			mm
Overall high of board incl. circuits			26	mm
Supply Power 12 V > voltage > current	10.8	12	13.2 1.8	V A
Supply Power 3.3 V > voltage > current	3.15	3.3	3.45 1.0	V A
Overall power consumption			25	W

22.6.3 Connectors for Application-specific Signals

Parameter	Min.	Typ.	Max.	Unit
Voltage	-60		+60	V
Current			2	A

22.6.4 Analog Inputs AIN0 ... AIN3

Parameter	Min.	Typ.	Max.	Unit
Measurement range	0			V
Resolution	8			Bits
Sampling rate		1		kSamples/s
Accuracy at 23±5°C, ±(% of value + offset)	-(1.0+25 mV)		+(1.0+25 mV)	

The accuracy of a measured voltage depends on two parts (% of value + offset). The first part (relative value) depends on the measured value; the second part (absolute value) is a fixed offset voltage.

As an example, if you measure a voltage of 2 V, you get an accuracy of ±45 mV (1.0 % of 2V + 25 mV).

22.6.5 Analog Output AOUT0 ... AOUT3

Parameter	Min.	Typ.	Max.	Unit
Output voltage range	0		3.34	V
Resolution	8			Bits
Accuracy at 23±5°C, ±(% of value + offset)	-(1.5+40 mV)		+(1.5+40 mV)	

23 VT7970/VT7971 – Smart Charging Module

In this chapter you find the following information:

23.1 Purpose **351**
23.1.1 VT7970 351
23.1.2 VT7971 351
23.2 Installation **351**
23.3 Usage **352**
23.3.1 Basic Connection Scheme 352
23.3.2 Signal Path Switching 353
23.3.3 System Variables 353
23.3.4 Error Simulation 354
23.3.5 Displays 354
23.4 Connectors **356**
23.4.1 Communication Connector 356
23.4.2 Measurement Connector 357
23.5 Technical Data VT7970/VT7971 ..... **358**
23.5.1 General 358
23.5.2 Control Pilot PWM Stimulation 359
23.5.3 16.5.3 Control Pilot PWM Measurement 360
23.5.4 Proximity Contact Measurement 361
23.5.5 Error Simulation 361
23.5.6 Line Communication 361

23.1 Purpose

23.1.1 VT7970

The VT7970 is a dedicated module for testing the smart charge communication of electric vehicles. It is the combination of a VT7900A and an application board which is mounted on the VT7900A. The module can simulate both communication partners, the electric vehicle supply equipment (EVSE) and the electric vehicle (EV) itself and offers the following features:

- Control pilot (CP) circuit for PWM communication according to IEC 61851-1 Annex A
- Electrically isolated from the remaining VT System
- Power line communication (PLC) with Devolo dLAN® GreenPHY Module which is integrated on the VT7870 and communicates with CANoe via a RJ45 connector
- Voltage measurement of proximity contact (PP)
- Several possibilities to simulate errors and vary component values
- PWM signal will be generated and measured on the application board, but external measurement and stimulation is also possible
- Parameters of the PWM signal and the relays to switch the signal paths can be controlled in CANoe via system variables

23.1.2 VT7971

The VT7971 offers the same functionality as the VT7970. The only difference is the power line communication module. Instead of the the Devolo dLAN® GreenPHY module a Vertexcom GreenPHY module is used.

23.2 Installation

Please follow the general installation instructions in chapter 2.1.2 Modules.

The GreenPHY module is already mounted on the application board. The processor on this module is used also for stimulation and measurement of the PWM signal and communication with CANoe and is therefore necessary for a correct function of the VT7970/VT7971.



NOTICE!

As the processor on the GreenPHY module is also used for other tasks than PLC, the module must not be removed, even though the PLC functionality is not used.

23.3 Usage

23.3.1 Basic Connection Scheme

Communication Connection

For testing the smart charge communication the following signals of a charging plug can be connected.

- **Connecting of control pilot**
  For the control pilot signal there are two identical connectors available. At CP_EVSE the electric vehicle supply equipment will be connected and at CP_EV the electric vehicle will be connected. So it is also possible to connect EV and EVSE to the VT7970/VT7971 at the same time.
- **Connecting of PE**
  With this connector the PE (protective earth) will be connected to the ground of the VT7970/VT7971, which is electrically isolated from the remaining VT System (including the main module VT7900).
- **Connecting of proximity contact**
  At this connector the proximity contact signal for detection of the possible charging current can be connected.

Measurement Connection

For stimulation and measurement of the PWM signal also external instruments can be connected.

- **Connecting external PWM stimulation (PWM_Stim)**
  At this connector for example a signal generator can be connected to create the PWM signal externally. A voltage between 0V and 3.3V at this connector results to a level of +/-15V at the control pilot, whereat a voltage of 1.65V corresponds to a CP level of 0V.
- **Connecting external PWM measurement of CP (PWM_Meas)**
  At this connector for example a frequency counter can be connected to measure the PWM parameters of the control pilot signal. The CP signal is available with a level of max. +/-15V.
- **Connecting external voltage measurement of CP (V_CP_Meas)**
  At this connector for example a voltmeter can be connected to measure the high and low voltage level of the Control Pilot signal. The CP signal is available with a level of max. +/-15V.
- **Connecting external voltage measurement of PP (V_PP_Meas)**
  At this connector for example a voltmeter can be connected to measure the voltage of the proximity contact signal, which has a range from 0V to 5V.
- **Connecting the ground for external measurement and stimulation devices**
  With this connector the ground of the external measurement and stimulation devices can be connected to the ground on the application board. The ground of the application board is electrically isolated from the remaining VT System (including the main module VT7900) and is usually connected to protective earth (PE) of the charge plug.



NOTICE!

The application board (signals, supply voltages and ground) is electrically isolated from the remaining VT System. So care has to be taken when connecting external measurement devices (e.g. oscilloscope) that no ground connection to the VT System is established via the power network. It is recommended to use an isolation transformer.

Ethernet Connection

For the connection of the converted PLC signal to CANoe, a RJ45 connector is placed directly on the application board nearby the GreenPHY module.

23.3.2 Signal Path Switching

The figure below shows the various signal paths and switching options.

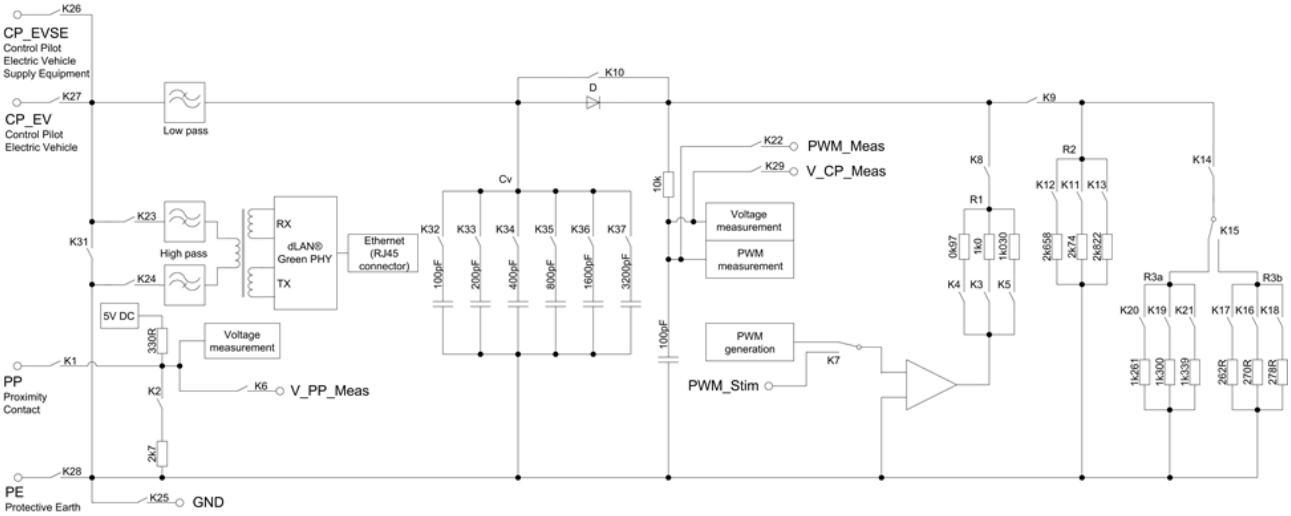

The VT7970/VT7971 has circuits to simulate either the electric vehicle supply equipment (EVSE) or the electric vehicle (EV). To vary between these two possibilities the signal path will be set by switching the relevant relays.

23.3.3 System Variables

The stimulation parameters for the PWM communication (frequency, duty cycle, high voltage, low voltage) can be controlled via system variables in CANoe. Also the measurement values of all PWM parameters and the proximity contact voltage are available permanent via system variables, independent if the VT7970/VT7971 is used for simulation of EVSE or EV. The relays are accessible via system variables, too.

The namespace is the name of the module specified in the VT System configuration:

Value/Setting	System Variable	R/W	Value Semantic
Relay function according to schematic in chapter 2.3.2	Relay_K1 ... Relay_ K37	W	Integer (0 = open, 1 = closed)
Proximity contact voltage measurement value	MeasPPVoltage	R	Float, in volt (0...5)
Control pilot PWM frequency measurement value	MeasFrequency	R	Float, in hertz (100...10000)
Control pilot PWM duty cycle measurement value	MeasDutyCycle	R	Float, in percent (0...100)

Value/Setting	System Variable	R/W	Value Semantic
Control pilot PWM high voltage measurement value	MeasVoltageHigh	R	Float, in volt (-15...15)
Control pilot PWM low voltage measurement value	MeasVoltageLow	R	Float, in volt (-15...15)
Control pilot PWM frequency stimulation value	StimFrequency	W	Float, in hertz (100...10000)
Control pilot PWM duty cycle stimulation value	StimDutyCycle	W	Float, in percent (0...100)
Control pilot PWM high voltage stimulation value	StimVoltageHigh	W	Float, in volt (-15...15)
Control pilot PWM low voltage stimulation value	StimVoltageLow	W	Float, in volt (-15...15)



Cross Reference

As the VT7970/VT7971 i is based on the VT7900, the system variables can be edited (e.g. rename) with the Application Board Configurator, which is included in the CANoe installation (start menu | CANoe | Tools).

23.3.4 Error Simulation

The module features various error simulation and parameter variation possibilities:

- Simulation of broken wire
- Simulation of short circuit between control pilot (CP) and protective earth (PE)
- Variation of PWM frequency, PWM duty cycle and PWM high and low level
- Variation of capacitive load
- Variation of resistors between minimum, maximum and nominal values

The variation range of the parameters and values can be found in the section technical data, chapter 2.5.

The simulation of short and broken wires, the variation of the resistor values and the capacitive load will be done by relays. The necessary relay settings can be found in the figure in the section 2.3.2.

23.3.5 Displays

Front panel LEDs

The LEDs on the front panel of the main module VT7900 are not used for this application.

Application board LEDs

The state of the PLC and Ethernet connection will be display with various LEDs on the application board.

LED	Description
PLC-Link/Activity	...orange LED located between the GreenPHY Module and the RJ45 connector shows PLC-Link/Activity.
Ethernet-Link/Activity	...orange LED integrated in RJ45 connector shows Ethernet-Link/Activity.
Ethernet-Speed	...green LED integrated in RJ45 connector indicates the data speed (10/100 Mbps).

23.4 Connectors

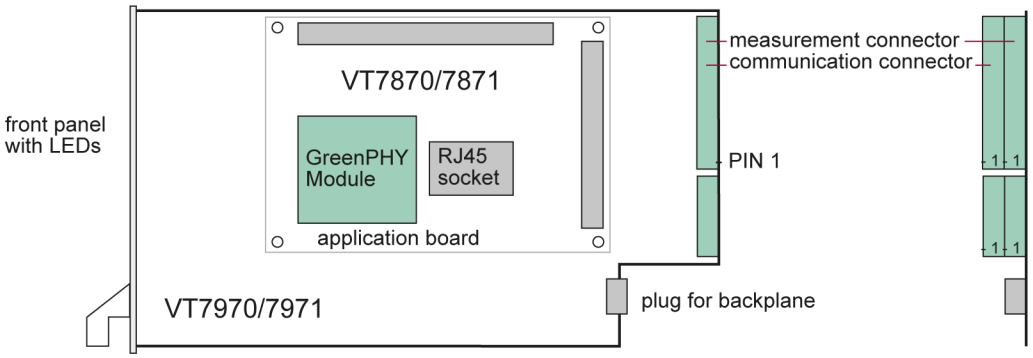

Figure **169:** Connectors

23.4.1 Communication Connector

Plug type: Phoenix Contact MC 1,5/16-ST-3,81

Plug allocation (from top to bottom, viewed from the rear after installation):

Pin	Description
16	CP_EVSE, Control Pilot Electric Vehicle Supply Equipment
15	PE, Protective Earth
14	CP_EV, Control Pilot Electric Vehicle
13	PP, Proximity Contact
12	N.C.
11	N.C.
10	N.C.
9	N.C.
8	N.C.
7	N.C.
6	N.C.
5	N.C.
4	N.C.



Pin	Description
3	N.C.
2	N.C.
1	N.C.

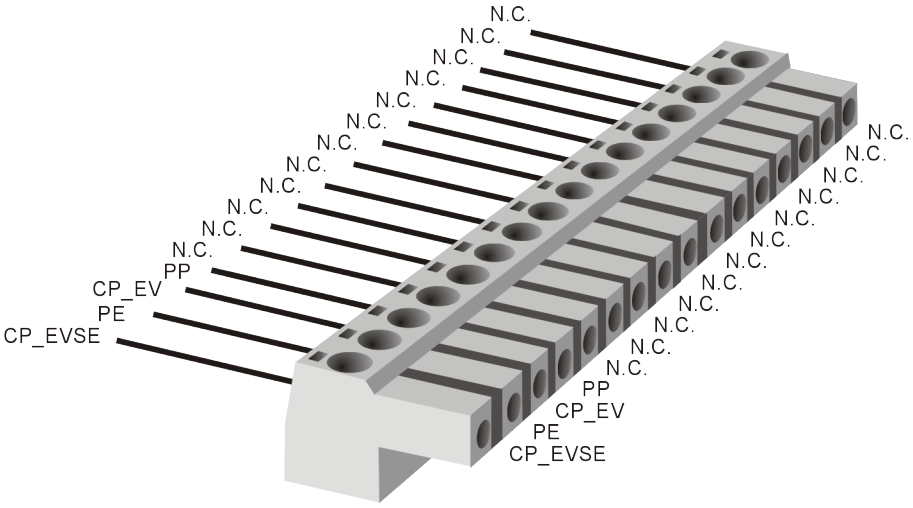

Figure **170:** Communication connector

23.4.2 Measurement Connector

Plug type: Phoenix Contact MC 1,5/16-ST-3,81

Plug allocation (from top to bottom, viewed from the rear after installation):

Pin	Description
16	PWM_Stim
15	PWM_Meas
14	V_CP_Meas
13	V_PP_Meas
12	GND
11	N.C.
10	N.C.



Pin	Description
9	N.C.
8	N.C.
7	N.C.
6	N.C.
5	N.C.
4	N.C.
3	N.C.
2	N.C.
1	N.C.

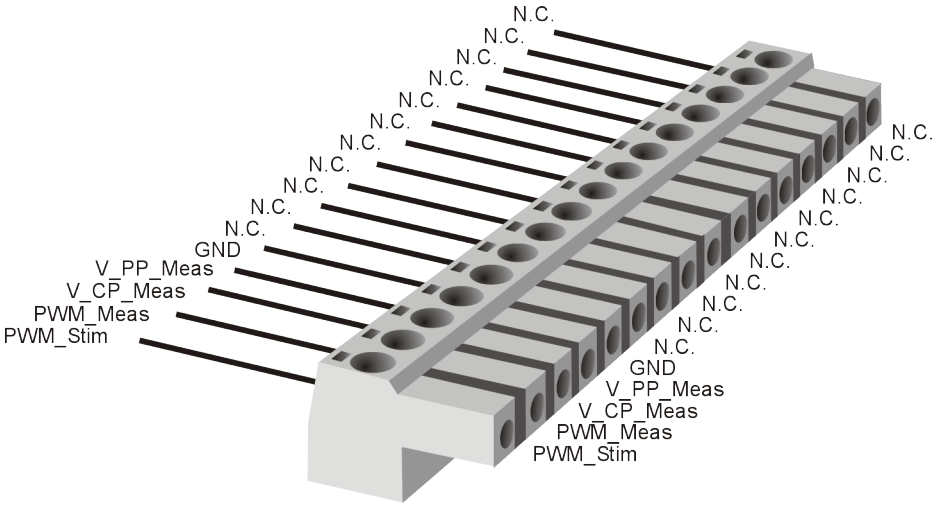

Figure **171:** Measurement connector

23.5 Technical Data VT7970/VT7971

23.5.1 General

Parameter	Min.	Typ.	Max.	Unit
Supply voltage (via the backplane)	10.8	12	13.2	V

Parameter	Min.	Typ.	Max.	Unit
Power consumption at 12.0 V > all relays off > 10 relays switched on > 20 relays switched on		 5.5 7.7 9		 W W
Temperature range	0		+55	°C
Dimensions (length × width × depth)	300 x 173 x 36			mm
Total weight without application board	approx. 500			g

23.5.2 Control Pilot PWM Stimulation

Parameter	Min.	Typ.	Max.	Unit
Voltage > range > accuracy	 -15 -1		 15 1	 V %
Signal rise time (±12V, 10% to 90%) > no load, PLC coupler disconnected > no load, PLC coupler connected > max. capacitive load (6.3 nF), PLC coupler disconnected > max. capacitive load (6.3 nF), PLC coupler connected		 1.0 3.6 14.2 16.8		 µs µs µs µs
Signal fall time (±12V, 90% to 10%) > no load, PLC coupler disconnected > no load, PLC coupler connected > max. capacitive load (6.3 nF), PLC coupler disconnected > max. capacitive load (6.3 nF), PLC coupler connected		 1.4 3.7 14.0 16.8		 µs µs µs µs
Frequency > range > accuracy	 100	 0.1	 10000	 Hz Hz
Duty cycle > range > accuracy	 1	 0.1	 99	 % %

23.5.3 16.5.3 Control Pilot PWM Measurement

Parameter	Min.	Typ.	Max.	Unit
Voltage > range > accuracy	 -15 -1		 15 1	 V %
Frequency > range > accuracy	 100	 0.1	 10000	 Hz Hz
Duty cycle > range > accuracy	 1	 0.1	 99	 % %

23.5.4 Proximity Contact Measurement

Parameter	Min.	Typ.	Max.	Unit
Voltage				
> range	0		5	V
> accuracy	-1		1	%
Resistance values				
> R4		2.7		kΩ
> R5		0.33		kΩ

23.5.5 Error Simulation

Parameter	Min.	Typ.	Max.	Unit
Capacitive load				
> range	0		6.3	nF
> step width		100		pF
Resistance values				
> R1	0.97	1	1.03	kΩ
> R2	2.658	2.70	2.822	kΩ
> R3a	1.261	1.3	1.399	kΩ
> R3b	0.262	0.270	0.278	kΩ

23.5.6 Line Communication

Parameter	Min.	Typ.	Max.	Unit
Low pass filter PLC rejection		20		dB
PLC insertion loss				
> RX path (AttnRxEVSE/AttnRxEV)		7		dB
> TX path (AttnTxEVSE/AttnTxEV)		7		dB
PLC transformer turn ratio (PL:RX:TX)	1:1:1			

24 VT8006B/VT8012B – Backplane

In this chapter you find the following information:

24.1 Purpose **363**
24.2 Installation **363**
24.3 External Connectors **364**
24.3.1 Power Supply Connector 366
24.3.2 Trigger Connector 366
24.3.3 Auxiliary Connector 367
24.3.4 Ethernet Connectors 367
24.4 Ground Connection Relay **367**
24.5 Technical Data VT8006B/VT8012B **368**

24.1 Purpose

The VT System backplane enables the VT modules to communicate with the PC and contains the power supply lines for the VT modules. It is mandatory to operate any VT System module.

24.2 Installation

The backplane VT8006B is built into a 19” half width frame (9.5”, 42 HP), the VT8012B into a 19" full width frame (84 HP) that has a height of 4 U. The VT modules are 7 HP wide, which means that 6 respective 12 slots are available.

Note

Please regard the maximum power consumption of all modules inserted into one backplane. The overall power consumption must not exceed the maximum power rating of the used backplane (refer to technical data).

Because the circuit board is asymmetric, the upper guide rails need to be 280 mm long and the lower ones 220 mm long. The guide rails must be able to support circuit boards that are 2.5 mm high (thickness of PCB).

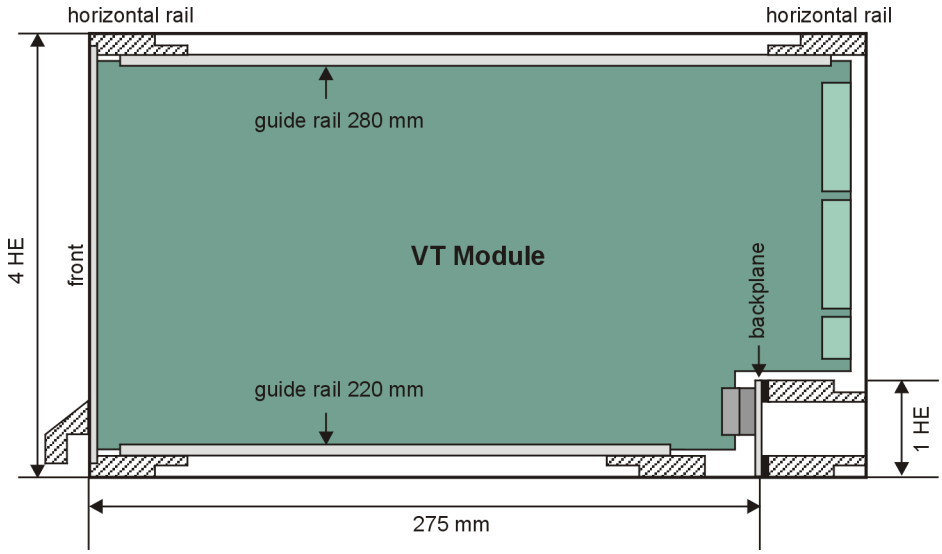

Figure **172:** Guide rails

Two additional horizontal rails are built in to the lower quadrant along with the backplane (see illustration below) Together with an insulation strip, this provides the correct clearance for the backplane when using a standard 19" rack.

Due to ESD and EMV requirements, there must be a conductive connection from the lower row of screws on the backplane to the rack and from the rack to the front panels of the modules. Therefore at least 4 grub screws should be added to the threaded strips in the two horizontal rails at the front of the frame and in the lower horizontal rail that holds the backplane. The grub screws establish a good electrical conductivity between the threaded strips and the rack.

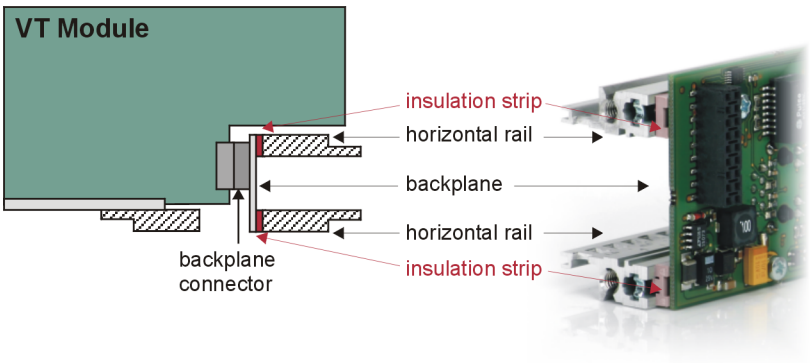

Figure **173:** Horizontal rails

NOTICE!

Take care to adjust the backplane carefully in the rack during assembly. The backplane connectors must fit to the connectors of the modules.

The modules are simply inserted into the rack and then configured in CANoe. They are automatically recognized via the backplane. The modules are listed in CANoe from left to right seen (seen while standing in front of the rack).

Any number of slots can be used in one rack. It is also possible to leave slots empty, e.g. use every other slot to improve heat dissipation. For EMC reasons, any gap at the front should be closed with cover plates.

The modules must not be plugged in or unplugged during operation. The VT System power supply must be switched off when installing or removing modules.

Insert the modules very carefully to avoid damages on the backside of the modules!

Please follow the general installation instructions in chapter 2.1.2 Modules.

The VT System is supplied with 12 V via the backplane. The PC running CANoe is connected via an Ethernet cable to the first backplane. Several backplanes can be cascaded.

See chapter System Setup for instructions how to setup the connections and the system.

24.3 External Connectors

The backplane features the following connectors:

VT8012B

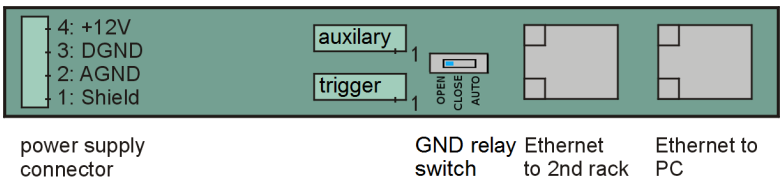

VT8006B

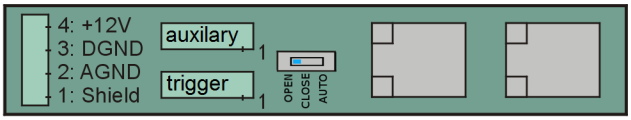

power supply connector | GND relay switch | Ethernet to 2nd rack | Ethernet to PC

24.3.1 Power Supply Connector

Plug type: Phoenix Contact MSTB 2,5 HC/ 4-ST-5,08

Plug allocation:

Pin	Description
4	+12 V Power supply input (V_{VT})
3	GND power supply input (DGND)
2	ECU reference ground (AGND)
1	Protective Earth (PE) – This signal is connected to the rack by the screws of the backplane. It is not necessary to connect this pin.

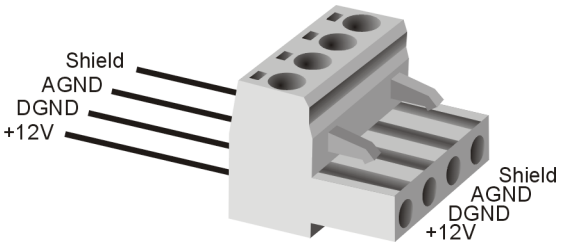

Figure **174:** Power supply connector

24.3.2 Trigger Connector

Plug type: Phoenix Contact MC 1,5/ 4-ST-3,81

Plug allocation (from top to bottom, viewed from the rear after installation):

Pin	Description
4	GND (DGND)
3	Trigger 2
2	GND (DGND)
1	Trigger 1 (Sync Signal)

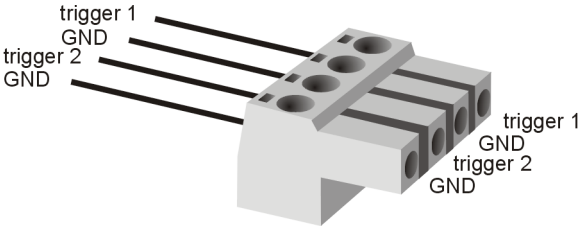

Figure **175:** Trigger connector

24.3.3 Auxiliary Connector

Plug type: Phoenix Contact MC 1,5/ 4-ST-3,81

Plug allocation (from top to bottom, viewed from the rear after installation):

Pin	Description
4	normally open relay contact b
3	normally open relay contact a
2	GND (DGND)
1	+12V Out

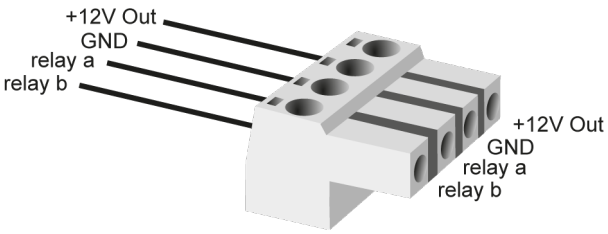

Figure **176:** Auxiliary connector

24.3.4 Ethernet Connectors

This is a standard Ethernet connector for a 100 MBit Ethernet cable with RJ-45 connectors.

- The **right-hand connector** (view of rear, after installation) is used for the PC connection. This can be done with a cross over or patch cable, or a switch. However, we do not recommend the latter as certain restrictions apply (see chapter System Setup); some switches also block EtherCAT data transmissions.
- The **left-hand connector** is used to cascade VT System racks. A 100 MBit Ethernet cable (patch cable) is used to connect this connector to the PC connector of the next rack. It is not possible to connect other devices (e.g. a PC) to this connector.

24.4 Ground Connection Relay

This switch can be used to create a connection between AGND and DGND. There are three possible positions:

- **OPEN**
  There is no connection between AGND and DGND on the VT8006B/VT8012B. Therefore, one external connection is needed. This is the default setting.
- **CLOSE**
  AGND and DGND are connected on the VT8006B/VT8012B. No other device should connect AGND and DGND.
- **AUTO**
  Automatic opening of the AGND-DGND connection on the VT8006B/VT8012B when a VT7001 A or VT7101 is connected. Supported with CANoe 14 SP2 onward.

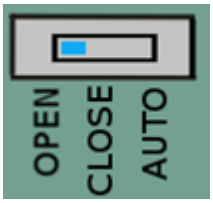

Figure **177:** Switch

See chapter 2.4 Supply Voltage and Ground for more information.

24.5 Technical Data VT8006B/VT8012B

Parameter		Min.	Typ.	Max.	Unit
Number of slots	VT8006B			6	
	VT8012B			12	
Supply voltage		10.8	12	13.2	V
Maximum permissible input current to the supply voltage connector (the current consumption depends on the number of connected modules)				16	A
Auxiliary connector output current (+12V Out)				2	A
Power consumption (backplane without modules)			3.8		W
Temperature range		0		+55	°C
Dimensions (length × width × depth)	VT8006B	210 × 46 × 35			mm
	VT8012B	427 × 46 × 35			
Total weight	VT8006B	approx. 120			g
	VT8012B	approx. 170			

25 VT9006/VT9012/VT9112/VT9212 - Housings

In this chapter you find the following information:

25.1 Installation **370**
25.2 Technical Data VT9xxx **370**
25.2.1 VT9006 370
25.2.2 VT9012 370
25.2.3 VT9112 370
25.2.4 VT9212 371

25.1 Installation



NOTICE!

Insert the modules very carefully into the housing to avoid damaging components on the rear side of the modules.

Please follow the general installation instructions in chapter 2.1.2 Modules.

25.2 Technical Data VT9xxx

25.2.1 VT9006

Parameter	Min.	Typ.	Max.	Unit
Number of slots			6	
Dimensions (length × width × depth)	235 x 230 x 315			mm
Total weight	approx. 2.53			g
Included Backplane	VT8006			

25.2.2 VT9012

Parameter	Min.	Typ.	Max.	Unit
Number of slots			12	
Dimensions (length × width × depth)	450 x 230 x 315			mm
Total weight	approx. 3.72			g
Included Backplane	VT8012			

25.2.3 VT9112

Parameter	Min.	Typ.	Max.	Unit
Number of slots			12	
Dimensions (length × width × depth)	484 x 177 x 300			mm
Total weight	approx. 2.18			g
Included Backplane	VT8012			

25.2.4 VT9212

Parameter	Min.	Typ.	Max.	Unit
Number of slots			12	
Dimensions (length × width × depth)	484 x 177 x 300			mm
Total weight	approx. 2.01			g
Included Backplane	Not included			

26 User Programmable FPGA

In this chapter you find the following information:

26.1 Purpose **373**
26.2 Installation **373**
26.3 Usage **373**
26.4 Technical Data **374**

26.1 Purpose

Some VT System modules are available with a processor board which includes a second, user programmable FPGA. This FPGA has access to the I/O hardware on the VT System modules and communicates with CANoe and allows therefore implementing custom functionality:

- Measurement data conditioning or signal generation, which cannot be covered with the standard VT System modules functionality, can be custom designed for specific test applications.
- Time critical functions can be sourced out to the FPGA hardware instead of executing them software-based with CANoe.
- Complete simulation models can be implemented directly on the FPGA.

26.2 Installation

As the processor board of the VT System modules is plugged onto the main PCB, the modules can also be ordered with the special processor board which includes a second, user programmable FPGA. The processor board comes already mounted so there is no further installation or connection necessary.

The following modules can be ordered with the FPGA processor board:

- VT1004A – Load and Measurement Module
- VT2004A – Stimulation Module
- VT2516A – Digital Module
- VT2816 – General-Purpose Analog I/O Module
- VT2848 – General-Purpose Digital I/O Module
- VT7900A – Extension Module
- VT2710 – Serial Interface Module
  Note: The module is always equipped with a User FPGA.

26.3 Usage

The User FPGA functionality will be developed by using the VT System FPGA Manager. This tool manages FPGA projects, defines the communication with CANoe, manages the compiling process and also programs the User FPGA without the need of an additional programming hardware. The VT System FPGA Manager supports different ways of design entries for the FPGA. For advanced users the hardware description language VHDL can be used. But it is also possible to design the FPGA functionality without detailed HDL experience by using a graphical schematic entry with Simulink®.



Cross Reference

The latest version of the VT System FPGA Manager and the related user manual can be found in the CANoe installation (start menu | CANoe | Tools).

26.4 Technical Data

Parameter	Value	Unit
FPGA series	Altera® Cyclone IV E	
FPGA type	EP4CE75	
FPGA Size (logic elements)	75000	LE
Usable clock frequencies (can be selected independent for every FPGA project with the VT System FPGA Manager)	10, 40, 80	MHz
Cutoff frequency	> VT1004A: 9 (high impedance) > VT1004A: 10 (low impedance) > VT2516A: 9 > VT2816: 40 (60V) > VT2816: 20 (10V) > Debug LEDs: 800 (output)	kHz

The sample rate of raw data from analog value measurements (e.g. 250 kSamples/s) specifies how often new data is received by the user FPGA. This means that the measurement value for each channel in the user FPGA is updated every 4 µs.

VECTOR >

MORE INFORMATION

Visit our website for:

- News
- Products
- Demo software
- Support
- Training and Workshops
- Contact addresses

vector.com