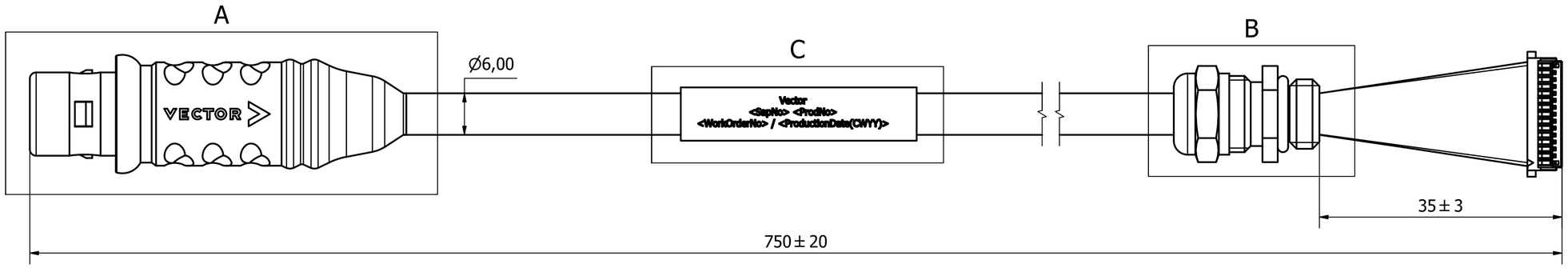

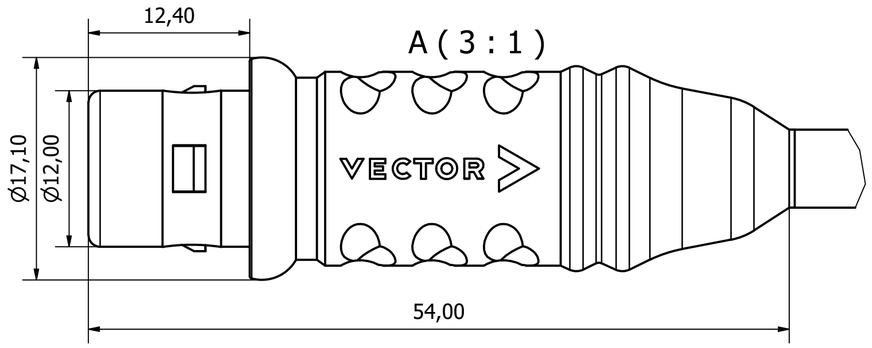

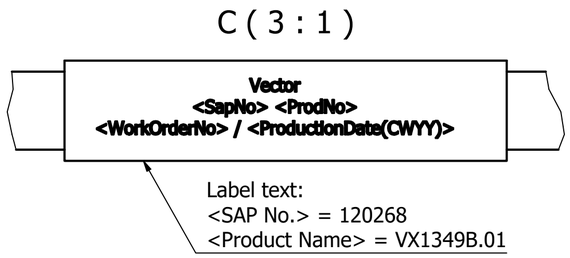

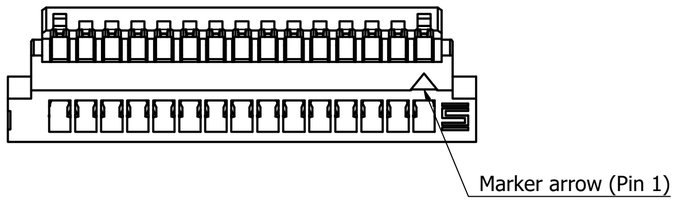

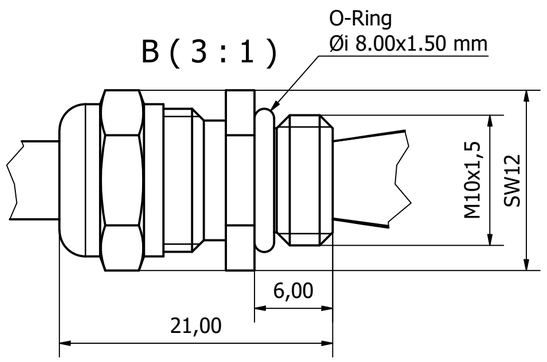

General Information:
- The picture shows the schematic structure and may not perfectly reflect the reality.
- Temperature range: -40°C to +125°C
- IP Protection class: IP64 while connected
- Bending radius of the cable: 60mm minimum, but can be reduced to 15mm if permanently installed in a fixed position
- Bending radius of internal wires: 7mm if paired, 3mm for separated wires
- Releasing/plugging of the connectors is only allowed at temperatures above +0°C

Vector SAP Number 120268	Supplier Part Number				
Drawing Number WIR_000219_CUST	Revision 2.0.0	Drawn virkgo	Checked vismat	Status Series	Released 2025-09-01
Title VX1349B.01 Serial Pigtail B715E0E35D			Released For public		Unit metric
VECTOR	Surface Properties				RoHS Compliance 2011/65/EU
	Base Material				
Temp v5.0.0	Document Type customer drawing	Size A2	General Tolerances		Page 1 /1

© Vector Informatik GmbH. All rights reserved.
This document and its contents are copyright protected and proprietary to Vector Informatik GmbH. The reproduction, distribution and utilization of this document and/or its contents as well as the communication of its contents to others without express authorization is prohibited.